AC/DC
SERVICE AND OPERATION MANUAL

WARNING

IMPORTANT HEALTH WARNING: PHOTOSENSITIVE SEIZURES - A very small percentage of people may experience a seizure when exposed to certain visual images, including flashing lights or patterns. Even people with no history of seizures of epilepsy may have an undiagnosed condition that can cause “photosensitive epileptic seizures” due to certain visual images, flashing lights or patterns. Symptoms can include light-headedness, altered vision, eye or face twitching, jerking or shaking of arms or legs, disorientation, confusion, momentary loss of awareness, and loss of consciousness or convulsions that can lead to injury from falling down or striking nearby objects.

IMMEDIATELY STOP PLAYING AND CONSULT A DOCTOR IF YOU EXPERIENCE ANY OF THESE SYMPTOMS.

Stern Pinball machines are assembled in Elk Grove Village, Illinois, USA; each pinball machine has unique characteristics that make it a one-of-a-kind American-made product. Each machine will have variations in appearance resulting from differences in the machine’s particular wood parts, individual silk screened art and mechanical assemblies. Stern Pinball has inspected each game element to ensure it meets our quality standards.

The AC/DC mark and logo are owned by LEIDSEPLEIN PRESSE B.V. Used by Stern Pinball, Inc. with permission, all rights reserved.

Games configured for North America operate on 60 cycle electricity only. These games will not operate in countries with 50 cycle electricity (Europe UK, Australia).

MANUAL #780-50M5-00
AC/DC PRO #500-55C0-01

1-800-KICKERS - parts.service@sternpinball.com
www.sternpinball.com - facebook.com/sternpinball

TABLE OF CONTENTS

1. Setup and Moving 3

1.1 First-Time Setup Instructions..... 3
1.2 Adjustments Menu 6
1.3 Transporting the Game 10
1.4 Maintenance 11
1.5 Maintenance Kits 11
1.6 Common Parts..... 11
1.7 Updating Game Code for the S.A.M. System.... 12
1.8 Fuses and Cabinet Switches 13
1.9 Service Switch & CPU DIP Switch Settings..... 14
1.10 Diagnostic Aids 15
1.11 CPU DIP Switch Settings..... 15
1.12 Switch Locations..... 17
1.13 Lamp Locations 19
1.14 Coil Locations 21

2. Service Menu System 22

2.1 Service Menu Introduction..... 22
2.2 Service Menu Icon Tree..... 23
2.3 Problem/Solution Table..... 25
2.4 Diagnostics Menu 26

3. Parts Identification & Location 34

3.1 Backbox Parts..... 34
3.2 Speaker Panel Parts 34
3.3 Cabinet Parts 35
3.4 Playfield Top - Main Assem. & Switches..... 36
3.5 Playfield Bottom - Main Assem. and Switches.. 37
3.6 Playfield - Rubber Parts..... 38
3.7 Rubber Size Chart..... 38

4. Major Assemblies..... 39

4.1 Ball Shooter Assembly..... 39
4.2 Auto Launch Assembly 39
4.3 Flipper Assembly, Left..... 40
4.4 Flipper Assembly, Right 40
4.5 Pop Bumper Assembly 41
4.6 Slingshot Assembly..... 42
4.7 4-Ball Trough Assembly 42
4.8 Cannon Motor & Switch..... 43
4.9 AC/DC Cannon 43
4.10 Front Molding Assembly 44
4.11 Vertical Up-Kicker 44
4.12 Left Ramp Assembly..... 45
4.13 Right Ramp Assembly 45
4.14 Detonator Assembly..... 46
4.15 Electric Ball Gate..... 46
4.16 Swinging Bell Assembly..... 47
4.17 Riveted Bell Bracket Assembly..... 47
4.18 Bell Shaft Assembly 47
4.19 Back Panel Assembly 48

5. Schematics, Wiring & PCBs 49

5.1 Backbox Wiring..... 49
5.2 Playfield Wiring 52
5.3 Cabinet and Coin Door Wiring 54
5.4 Printed Circuit Boards..... 57

6. Specifications 84

6.1 Game Dimensions..... 84
6.2 Warranty..... 85
6.3 Warnings, Compliance, and Legal Notices..... 85

1. SETUP AND MOVING

1.1 FIRST-TIME SETUP INSTRUCTIONS

Your brand new Stern Pinball Machine is carefully packed for safety and security. For your safety, exercise caution and use the correct tools and sufficient help when setting up your new game.

TOOLS REQUIRED

- 5/8” Socket Wrench
- Utility Knife
- Snips
- An Assistant

CAUTION: AT LEAST TWO (2) PEOPLE ARE REQUIRED TO MOVE AND MANEUVER THE GAME. USE PROPER MOVING EQUIPMENT AND EXTREME CARE WHILE HANDLING. STERN PINBALL MACHINES WEIGH OVER 250LBS BOXED.

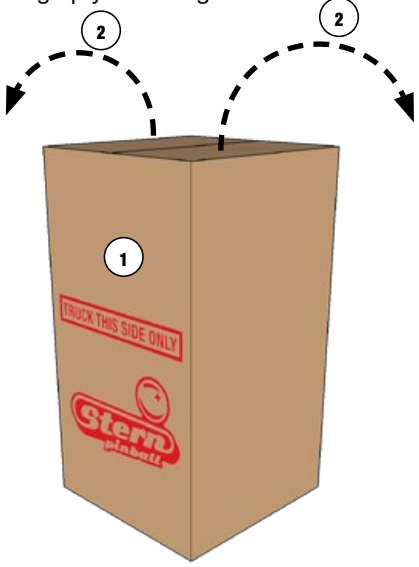

1. Locate the side labeled “TRUCK THIS SIDE ONLY”. The bottom of the game faces this side.
2. Open the top box flaps by pulling hard in an upward motion on each flap. If the flaps are taped, cut the tape first, taking care to avoid the box staples.

3. Remove the four (4) foam pieces and two (2) narrow box tubes which contain the four (4) identical legs with levelers.
4. DO NOT CUT STRAPPING YET. Keep backbox secured in the down position.
5. With the utility knife, carefully cut down the left and right corners of the box.

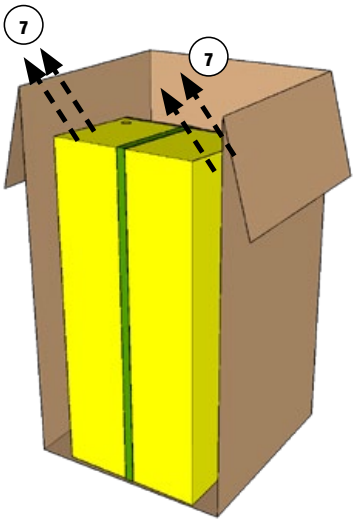

6. Let the face fall forward and remove the entire side by carefully cutting the bottom.
7. With the game still in its folded position, use a ⅝” wrench to loosen and remove the 2 leg bolts on each side of the front cabinet. Ensure the leg levelers are screwed all the way into the legs.

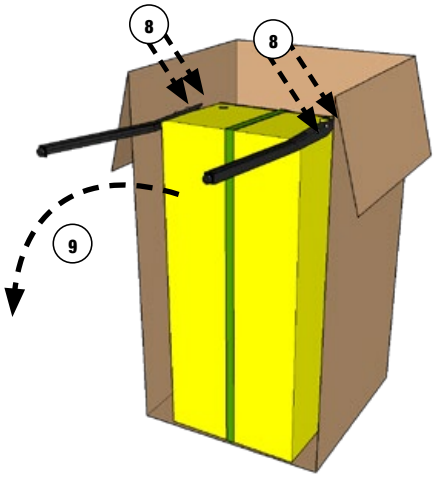

8. Install front legs using the bolts removed from the cabinet. Secure tightly.
9. Have someone help you carefully set the game down on the front legs.

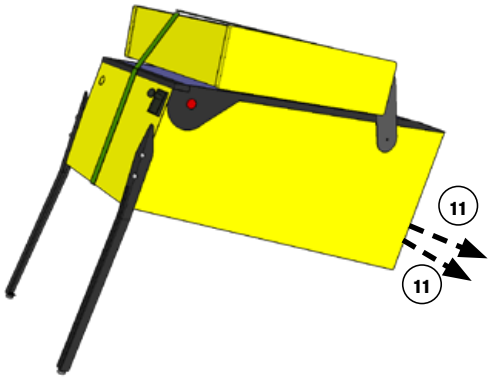

10. Set aside the open box.
11. With a ⅝” socket wrench, loosen and remove the 2 leg bolts on each side of the rear cabinet, 4 total.

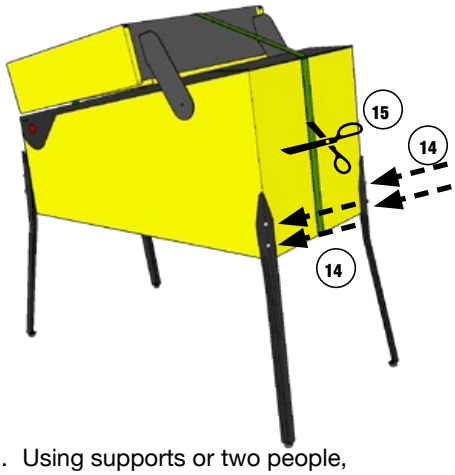

12. Using supports or two people, prop the rear of the cabinet up.
13. Ensure the rear leg levelers are screwed all the way into the legs.
14. Install rear legs using the 4 bolts removed from step 11.

FIRST-TIME SETUP CONTINUED

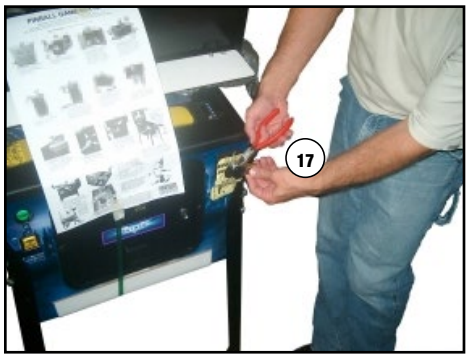

15. Cut nylon strapping and remove protective strap corner guards.
16. Locate the factory keys, either on the shooter rod or taped to the playfield glass.
17. Using snips, cut the tie-wrap securing the keys if required. One set of keys is for the front coin door, the other set of keys is for accessing components in the backbox.

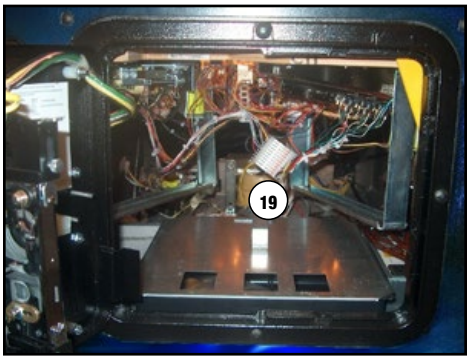

18. Open the front coin door.
19. Reach into the game and remove the retaining clip at the rear of the cash box.
20. Remove the cash box lid by sliding it toward you.

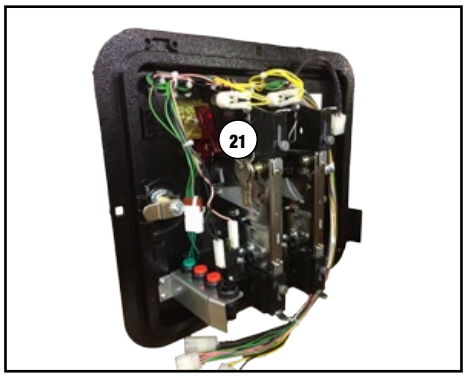

21. Store the backbox keys, if desired, on the metal hook located in the coin door.
22. Locate and remove the pinballs, plumb bob, and backbox bolts from the cash box.
23. Replace the cash box lid and retaining clip for future use.

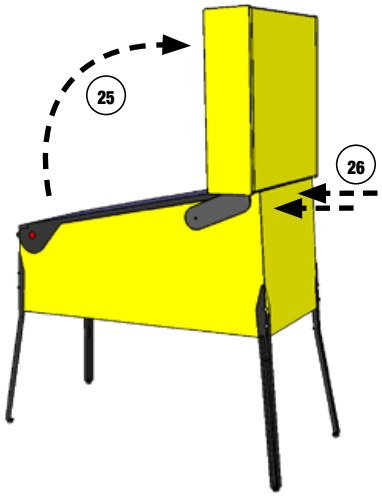

24. Locate the two (2) backbox bolts in the cash box.
25. Carefully raise backbox to upright position while ensuring that cables are not pinched.
26. Use the ⅝” wrench to Install the two (2) backbox bolts to secure the backbox as indicated on the back of the cabinet.

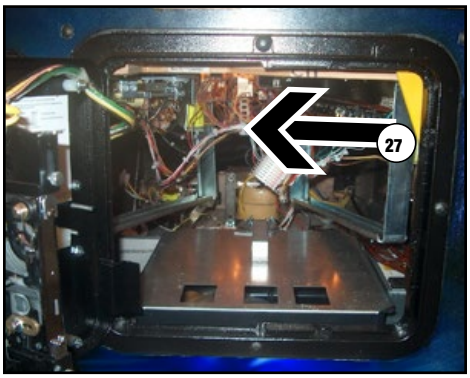

27. Reach inside the cabinet and hold and move the yellow top molding lock handle to the left.
28. Remove the front top molding.

29. Remove the playfield glass by sliding it toward you and carefully place it in a safe location.
 Remove all playfield shipping tie downs, shipping blocks, and packing foam, and follow any game-specific unpacking instructions included in the playfield, if present.

CAUTION: PLAYFIELD GLASS IS MADE FROM HIGH-STRENGTH TEMPERED GLASS. TEMPERED GLASS IS SENSITIVE TO EXTREME TEMPERATURE SHIFTS AND CORNER NICKS, WHICH CAN CAUSE THE GLASS TO FAIL CATASTROPHICALLY. TAKE CARE TO STORE THE GLASS ON A SOFT, ROOM-TEMPERATURE SURFACE AND PREVENT THE CORNERS FROM BEING DAMAGED.

FIRST-TIME SETUP CONTINUED

30. If pinballs were already installed into the lower ball trough, remove them before lifting the playfield.
31. Grasp the lower arch between the flippers, and firmly but gently pull directly up to raise the playfield 8 to 12 inches.
32. While holding the playfield up, pull the playfield toward you until the two playfield supports are over the front edge of the cabinet.
33. Rest the playfield on the front edge of the cabinet.
34. Raise the playfield and rest it against the backbox.
35. Visually inspect all cabinet cables and connector terminations; ensure no wires or cables are pinched and that cable harnesses are not pulled tight.
36. Locate the plumb bob in the parts bag in the cash box.
37. Slide plumb bob onto the hanger wire. Note: the vertical position of the plumb bob affects tilt sensitivity - higher makes the game more sensitive to tilting.
38. Tighten the thumb screw finger-tight.
39. Install the correct number of pinballs. Refer to the decal on the lock down assembly for the correct number of pinballs.

LOCATING, LEVELING, AND FINAL SETUP

1. Select a location that is indoors, out of direct sunlight, and climate controlled. Excessive moisture/humidity can cause long-term damage to your game.
2. Adjust the front or rear levelers as necessary to position the playfield level bubble, located on the front right of the playfield next to the shooter lane, to float between the two (2) black lines. This will place the playfield at the recommended 6.5° pitch. Playfield angles greater than 6.5° can be achieved by turning out the rear leg leveler(s) for increased difficulty and faster gameplay.
3. Use a pinball to roll down the center of the playfield for side-to-side leveling, or use an external bubble level, digital level, or smartphone level app.
4. Plug into a grounded outlet and check for proper operation through DIAGNOSTICS.
5. Check the coin door: With the door closed, insert coins to verify proper operation.
6. Play game: Check for satisfactory operation and adjust game volume (push the Red Buttons inside the Coin Door).
7. If desired, perform any game diagnostics, game adjustments, and pricing settings at this time.

1.2 ADJUSTMENTS MENU

STANDARD ADJUSTMENTS

Perform the below steps to review the adjustments.

Enter the Service Menu, then enter the Standard Adjustments Menu.

Press SELECT. Press BACK to exit or escape at any time.

Press [>]. Go to the ADJ icon. Press SELECT.

Go to the S.P.I. icon. Press SELECT.

STANDARD ADJUSTMENT #1 appears with the adjustment name flashing. While the adjustment name is flashing press [<] [>] to move between adjustments.

To change the adjustment setting press SELECT. While the adjustment setting is flashing, press [<] [>] repeatedly until the desired setting appears. Press the SELECT button to “install” the change. The adjustment comment (bottom line) will indicate if the factory default setting is selected or will display INSTALLED if the change is not a factory default setting.

ID	Adjustment Name	Default Setting
1	REPLAY TYPE	AUTO
2	REPLAY PERCENTAGE	10%
3	REPLAY AWARD	CREDIT
4	REPLAY LEVELS	1
5	AUTO REPLAY START	20,000,000
6	DYNAMIC REPLAY START	60,000,000
7	REPLAY LEVEL #1	15,000,000
8	REPLAY LEVEL #2	30,000,000
9	REPLAY LEVEL #3	45,000,000
10	REPLAY LEVEL #4	60,000,000
11	REPLAY BOOST	YES
12	SPECIAL LIMIT	1
13	SPECIAL PERCENTAGE	10%
14	SPECIAL AWARD	CREDIT
15	FREE GAME LIMIT	5
16	EXTRA BALL LIMIT	5
17	EXTRA BALL PERCENTAGE	25%
18	GAME PRICING	USA 11
19	MATCH PERCENTAGE	9%
20	MATCH AWARD	CREDIT
21	BALLS PER GAME	3
22	TILT WARNINGS	2
23	CREDIT LIMIT	30
24	ALLOW HIGH SCORES	YES
25	HIGH SCORE AWARD	CREDIT
26	GRAND CHAMPION AWARDS	1
27	HIGH SCORE #1 AWARDS	1
28	HIGH SCORE #2 AWARDS	0
29	HIGH SCORE #3 AWARDS	0
30	HIGH SCORE #4 AWARDS	0
31	GRAND CHAMPION SCORE	75,000,000
32	HIGH SCORE #1	55,000,000
33	HIGH SCORE #2	40,000,000

ID	Adjustment Name	Default Setting
34	HIGH SCORE #3	30,000,000
35	HIGH SCORE #4	25,000,000
36	HSTD INITIALS	3 INITIALS
37	HSTD RESET COUNT	2000
38	FREE PLAY	NO
39	LANGUAGE	ENGLISH
40	PLAYER LANGUAGE SELECT	YES
41	CUSTOM MESSAGE	ON
42	FLASH LAMP POWER	NORMAL
43	COIL PUSLE POWER	NORMAL
44	KNOCKER VOLUME	NORMAL
45	GAME RESTART	YES
46	BILL VALIDATOR	NO
47	MUSIC VOLUME	1
48	BALL SAVE TIME	0:05
49	TIMED PLUNGER	OFF
50	FLIPPER BALL LAUNCH	OFF
51	COINDOOR BALL SAVER	NO
52	COMPETITION MODE	NO
53	CONSOLATION BALL	YES
54	FAST BOOT	YES
55	Q24 OPTION	COIN METER
56	TICKET DISPENSER	NO
57	PLAYER COMPETITION	YES
58	TEAM SCORES	NO
59	LOCATION ID	0
60	GAME ID	0
61	TIME FORMAT	12-HOUR
62	COIN INPUT DELAY	30
63	LOST BALL RECOVERY	YES
64	COIN DOOR DISABLE TILT	NO

FEATURE ADJUSTMENTS

Each table has feature adjustments specific to the characteristics of that game. To access feature adjustments enter the Service Menu and then enter the Adjustments Menu.

Press SELECT to access the Service Menu. Press BACK to exit or escape at any time.

Press [>]. Go to the ADJ icon. Press SELECT.

Go to the game icon. Press SELECT.

FEATURE ADJUSTMENT #1 appears with the adjustment name flashing. With the adjustment name flashing press [<] [>] to move between adjustments. Feature adjustments are changed similarly to standard adjustments using the SELECT button to choose options and the [<] [>] buttons to cycle through available settings.

USA & INTERNATIONAL (NON-EURO) STANDARD PRICING SELECT TABLE

CPU/SOUND PCB DIP SWITCH SW1 SETTING	COUNTRY SETTING OPTION(S)	COIN MECHANISMS (SWITCHES) COINS THRU ... SLOT: LEFT	CENTER	RIGHT	4TH	PRICING SCHEME (Number of Plays (Credits) for Price Amount Shown — See "Appendix J" for Coin Cards Examples & Info!)						Requires SPI Coin Card(s) Part Number
Pos. 1 2 3 4 5 6 7 8 — Default Highlighted						USD // UNITED STATES DOLLAR // [$]						
ON / OFF	USA 1	0.25	1.00	0.25		1/0.25						755-5400-01-Y
▼▼▼▼▼▼▼▼	USA 2					1/0.50	2/0.75	3/1.00				755-5400-02-Y
	USA 3					1/0.50	For USA 6 and USA 7 use: 755-5400-02-Y USA 6 Note: If player uses X4 25¢ quarters = 2 plays. However, $1 bill = 3 plays!					755-5400-02-Y
	USA 4					1/0.50						755-5400-02-Y
	USA 5					1/0.50	2/1.00	3/1.50	5/2.00			755-5400-00-Y
	USA 6					1/0.50	2 /'4 X 25¢'	3 /$ 1.00 Bill				◀ Used to promote the Bill Validator.
	USA 7					1/0.50	2/1.00	4/1.50	6/2.00			
	USA 8					1/0.50	3/1.00					755-5400-00-Y
	USA 9					1/1.00						755-5400-07-Y
	USA 10					1/0.75	2/1.50	3/2.00				755-5400-11-Y
	USA 11					1/1.00	3/2.00					
Pos. 1 2 3 4 5 6 7 8 — Default Highlighted						AUD // AUSTRALIAN DOLLARS // [$AUS]						
ON ▲ ▲ ▲ / OFF ▼ ▼ ▼ ▼ ▼	AUSTRALIA 1	0.20	1.00	2.00		1/1.00	3/2.00					755-5406-00-Y (1 Side)
	AUSTRALIA 2					1/1.00						
	AUSTRALIA 3					1/2.00						
	AUSTRALIA 4					1/2.00	2/4.00	3/5.00				
	AUSTRALIA 5					1/3.00	2/5.00	3/8.00				5/10.00
	AUSTRALIA 6					1/2.00	2/3.00					
Pos. 1 2 3 4 5 6 7 8 — Default Highlighted						CAD // CANADIAN DOLLARS // [$CAN]						
ON ▲ ▲ / OFF ▼ ▼ ▼ ▼ ▼	CANADA 1 [25¢ door]	0.25	0.25	1.00	2.00	1/0.50	2/0.75	3/1.00				755-5400-00-Y -01-Y or -02-Y
ON ▲ ▲ ▲ / OFF ▼ ▼ ▼ ▼	CANADA 2 [dollar door]	1.00		2.00		1/1.00	3/2.00					755-5400-10-Y
Pos. 1 2 3 4 5 6 7 8 — Default Highlighted						HRK // CROATIAN KUNA // [kuna]						
ON ▲ ▲ ▲ / OFF ▼ ▼ ▼ ▼	CROATIA	1	2	5		1/3	2/5					755-5410-00-Y (2-Sided)
Pos. 1 2 3 4 5 6 7 8 — Default Highlighted						DKK // DANISH KRONER // [Kr]						
ON ▲ ▲ / OFF ▼ ▼ ▼ ▼ ▼	DENMARK 1	1	5	10	20	1/3	2/5					755-5402-00-Y (2-Sided)
	DENMARK 2					1/2	2/4	3/5	4/7	5/9	7/10	
Pos. 1 2 3 4 5 6 7 8 — Default Highlighted						JPY // JAPANESE YEN // [¥]						
ON ▲ ▲ ▲ / OFF ▼ ▼ ▼ ▼ ▼	JAPAN 1	100		100		1/100						755-5408-01-Y (2-Sided)
	JAPAN 2					1/100	3/200					
Pos. 1 2 3 4 5 6 7 8 — Default Highlighted						TOKEN // Middle East currency used to buy token // [TOKEN]						
ON ▲ ▲ ▲ ▲ / OFF ▼ ▼ ▼ ▼	MIDDLE EAST	token		token		1/1						755-5400-06-Y (use Side 1)
Pos. 1 2 3 4 5 6 7 8 — Default Highlighted						NZD // NEW ZEALAND DOLLAR // [$NZD]						
ON ▲ / OFF ▼ ▼ ▼ ▼ ▼ ▼ ▼	NEW ZEALAND 1	1		2		1/1						755-5406-00-Y (Side 2)
	NEW ZEALAND 2					1/1	3/2					
Pos. 1 2 3 4 5 6 7 8 — Default Highlighted						NOK // NORWEGIAN KRONE // [Kr]						
ON ▲ ▲ / OFF ▼ ▼ ▼ ▼ ▼	NORWAY 1	10	5	20		1/10						755-5403-01-Y or -02-Y / (2-Sided)
	NORWAY 2					1/10	3/20					
	NORWAY 3					1/20						755-5403-03-Y (2-Sided)
	NORWAY 4					1/20	3/40					
6 7 8 5 1 4 2/3.00	NORWAY 5					1/.10						
	NORWAY 6					1/.10	3/.20					
	NORWAY 7					1/.20						
	NORWAY 8					1/.20	3/.40					
Pos. 1 2 3 4 5 6 7 8 — Default Highlighted		▼ LEFT SWITCH CAN BE WIRED TO BILL ACCEPTOR ▼				RUB // RUSSIAN RUBLE // [Ruble]						
ON ▲ ▲ ▲ / OFF ▼ ▼ ▼ ▼ ▼	RUSSIA	10	5	1		1/5						755-5411-00-Y (2-Sided)
Pos. 1 2 3 4 5 6 7 8 — Default Highlighted						ZAR // SOUTH AFRICAN RAND // [R]						
ON ▲ ▲ / OFF ▼ ▼ ▼ ▼ ▼	SO. AFRICA 1	0.50	1.00	1.00	1.00	1/2.00						755-5409-01-Y (2-Sided)
	SO. AFRICA 2					1/3.00	2/5.00					
Pos. 1 2 3 4 5 6 7 8 — Default Highlighted						SEK // SWEDISH KRONOR // [kr]						
ON ▲ ▲ ▲ / OFF ▼ ▼ ▼ ▼ ▼	SWEDEN 1	1	5	10		1/10	2/15	3/20				755-5404-00-Y (2-Sided)
	SWEDEN 2					1/5						
Pos. 1 2 3 4 5 6 7 8 — Default Highlighted						CHF // SWISS FRANCS // [Sf]						
ON ▲ ▲ / OFF ▼ ▼ ▼ ▼ ▼	SWITZERLAND 1	1	2	5		1/1	2/2	3/3	4/4	6/5		755-5405-00-Y (2-Sided)
	SWITZERLAND 2					1/1	3/2	5/3	7/4	9/5		
Pos. 1 2 3 4 5 6 7 8 — Default Highlighted						TWD // TAIWANESE DOLLAR // [TWD]						
ON ▲ ▲ / OFF ▼ ▼ ▼ ▼ ▼	TAIWAN	10		10		1/10						755-5412-00-Y (use Side 1)
Pos. 1 2 3 4 5 6 7 8 — Default Highlighted		▼ 5TH COIN SLOT NOT AVAILABLE WITH CUSTOM PRICING ▼				GPB // UNITED KINGDOM POUNDS // [£]						
ON ▲ ▲ ▲ ▲ / OFF ▼ ▼ ▼ ▼	UK 1	LEFT	CENTER	RIGHT	4TH / 5TH	3/1.00	7/2.00					755-5407-00-Y
	UK 2					4/1.00						755-5407-01-Y*
	UK 3					1/0.50	2/1.00	3/1.50	5/2.00			755-5407-01
	UK 4	0.10	0.50	1.00	0.20 / 2£ ▲ Coin Only	1/0.30	2/0.60	3/0.90	4/1.00			755-5407-01-Y*
	UK 5					1/1.00	3/2.00					755-5407-01
	UK 6					3/2.00			*use blank side			755-5407-01-Y*

HIGHLIGHTED = Factory Default

HIGHLIGHTED = Not Shown on Coin Card

HIGHLIGHTED = Factory Default

HIGHLIGHTED = Not Shown on Coin Card

EURO SUMMARY & INTERNATIONAL (EURO) STANDARD PRICING SELECT TABLE

CPU/SOUND PCB DIP SWITCH SW1 SETTING	COUNTRY SETTING OPTION(S)	COIN MECHANISMS (SWITCHES) COINS THRU ... SLOT: LEFT	CENTER	RIGHT	4TH	PRICING SCHEME Number of Plays (Credits) for Price Amount Shown See "Appendix J" for Coin Cards Examples & Info!				Requires SPI Coin Card(s) Part Number
Pos. 1 2 3 4 5 6 7 8	Default Highlighted					EUR // EUROPEAN UNION EUROS // [€]				
ON S E E B E L O W	Euro 1	0.50	1.00	2.00	optional 0.20 optional	1/0.50				755-5401-01-Y
OFF S E T T I N G S	Euro 2					1/0.50	2/1.00	3/1.50	5/2.00	755-5401-02-Y
Euro 1-12 are alternate settings for countries using the Euro.	Euro 3					1/0.50		3/1.00		755-5401-03-Y
	Euro 4					1/0.50	2/1.00	3/1.50	6/2.00	755-5401-04-Y
HIGHLIGHTED = Factory Default	Euro 5					1/0.50	3/1.00	4/1.50	7/2.00	755-5401-05-Y
	Euro 6					2/0.50				755-5401-06-Y
HIGHLIGHTED = Not Shown on Coin Card	Euro 7					1/1.00	2/2.00	3/3.00	5/4.00	755-5401-07-Y
	Euro 8					1/1.00		3/2.00		755-5401-08-Y
	Euro 9					1/1.00		2/1.50	3/2.00	755-5401-09-Y
	Euro 10					1/1.00		3/2.00	7/3.00	755-5401-10-Y
	Euro 11					1/1.00		4/2.00		755-5401-11-Y
	Euro 12					2/1.00	4/2.00	6/3.00	9/4.00	755-5401-12-Y

*For a different **Euro Pricing Scheme** (other than Factory Default listed below), scroll through **Standard Adjustment 18**: Euro 1-12 or CUSTOM* for new setting (reference above Euro 1-12 Summary). Keep the Country Dip Switch Setting the same as listed below.*

Pos. 1 2 3 4 5 6 7 8	Default Highlighted					EUR // EUROPEAN UNION EUROS // [€]				
ON ▲	AUSTRIA Euro 9	0.50	1.00	2.00		1/1.00		2/1.50	3/2.00	755-5401-09-Y
OFF ▼ ▼ ▼ ▼ ▼ ▼ ▼										
Pos. 1 2 3 4 5 6 7 8	Default Highlighted									
ON ▲	BELGIUM Euro 1	0.50	1.00	2.00		1/0.50				755-5401-01-Y
OFF ▼ ▼ ▼ ▼ ▼ ▼ ▼										
Pos. 1 2 3 4 5 6 7 8	Default Highlighted									
ON ▲ ▲	FINLAND Euro 8	0.50	1.00	2.00		1/1.00		3/2.00		755-5401-08-Y
OFF ▼ ▼ ▼ ▼ ▼ ▼ ▼										
Pos. 1 2 3 4 5 6 7 8	Default Highlighted									
ON ▲ ▲	FRANCE Euro 10	0.50	1.00	2.00		1/1.00		3/2.00	7/3.00	755-5401-10-Y
OFF ▼ ▼ ▼ ▼ ▼ ▼ ▼										
Pos. 1 2 3 4 5 6 7 8	Default Highlighted									
ON ▲ ▲ ▲	GERMANY 1	0.50	1.00	2.00		1/0.50				755-5401-01-Y
OFF ▼ ▼ ▼ ▼ ▼	GERMANY 2					1/0.50	2/1.00	3/1.50	5/2.00	755-5401-02-Y
	GERMANY 3					1/0.50	2/1.00	3/1.50	6/2.00	755-5401-04-Y
Pos. 1 2 3 4 5 6 7 8	Default Highlighted									
ON ▲ ▲ ▲ ▲	GREECE Euro 8	0.50	1.00	2.00		1/1.00		3/2.00		755-5401-08-Y
OFF ▼ ▼ ▼ ▼										
Pos. 1 2 3 4 5 6 7 8	Default Highlighted									
ON ▲	ITALY 1	0.50		0.50		1/0.50				755-5401-01-Y
OFF ▼ ▼ ▼ ▼ ▼ ▼ ▼	ITALY 2					1/1.00		3/2.00		755-5401-08-Y
Pos. 1 2 3 4 5 6 7 8	Default Highlighted									
ON ▲	NETHERLANDS Euro 3	0.50	1.00	2.00		1/0.50		3/1.00		755-5401-03-Y
OFF ▼ ▼ ▼ ▼ ▼ ▼ ▼										
Pos. 1 2 3 4 5 6 7 8	Default Highlighted									
ON ▲ ▲	PORTUGAL	0.50		0.50		1/0.50				755-5401-01-Y
OFF ▼ ▼ ▼ ▼ ▼ ▼										
Pos. 1 2 3 4 5 6 7 8	Default Highlighted									
ON ▲ ▲	SPAIN Euro 8	0.50	1.00	2.00		1/1.00		3/2.00		755-5401-08-Y
OFF ▼ ▼ ▼ ▼ ▼ ▼ ▼										

HIGHLIGHTED = *Factory Default* HIGHLIGHTED = *Not Shown on Coin Card*

1.3 TRANSPORTING THE GAME

When transporting the game, such as in the back of a truck or with a hand truck, the game's backbox must be secured to prevent damage to the side rails.

CAUTION

NEVER TRANSPORT THE GAME IN A MOVING VEHICLE WITH THE BACKBOX RAISED! TWO PEOPLE ARE REQUIRED TO REMOVE THE LEGS!

1. SECURE THE BACKBOX

1. Ensure that the pinballs are removed from the playfield, and secure any free-moving mechanisms that may get damaged in transport

TOOLS REQUIRED

- **STRAP (500LB OR GREATER)**
- **AN ASSISTANT**
- **HAND TRUCK**

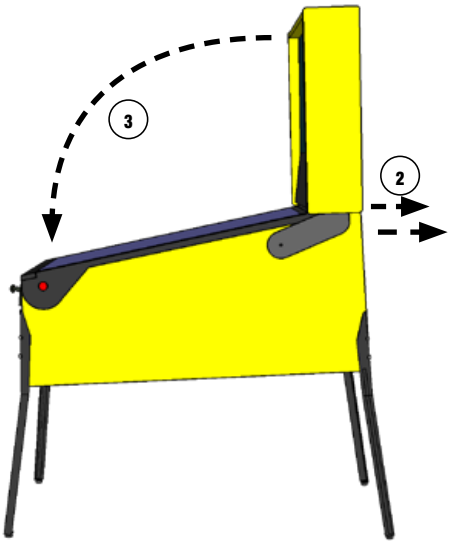

2. Remove the backbox securing bolts
3. Carefully lower the backbox onto the side rails. Use a piece of cardboard or suitable padding between the backbox and the game.

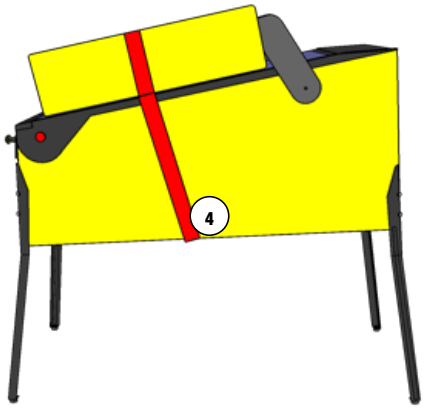

4. Securely strap the back box to the game
5. The game may be transported with the legs on. If the legs must be removed, follow the remaining steps.

2. REMOVE THE LEGS AND STAND UP

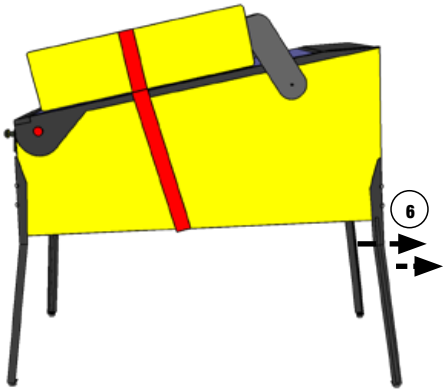

6. Remove the legs, rear legs first. Use a stool or a friend to support the rear of the game.
7. Rest the rear of the game on the ground.

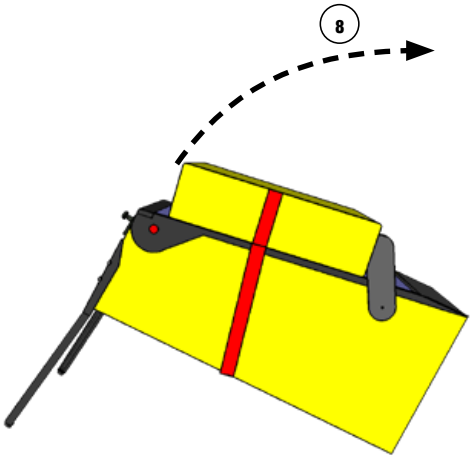

8. Stand the game up on its back.

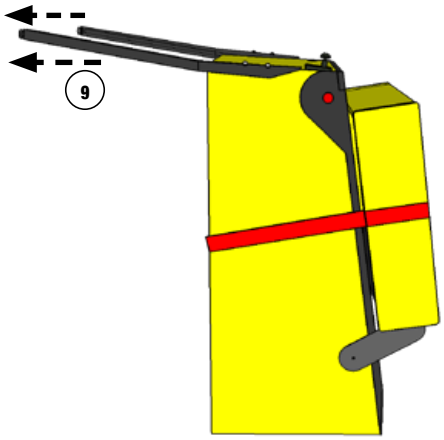

9. Remove the front two legs.

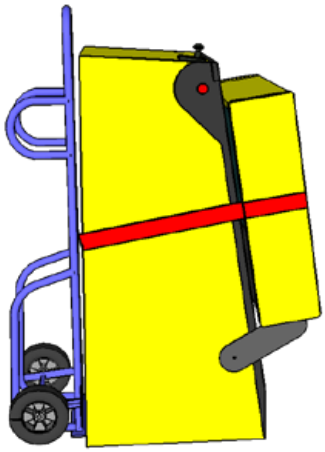

10. Secure all loose parts and transport with a hand truck in the upright position.

1.4 MAINTENANCE

REGULAR MAINTENANCE - (MONTHLY/500 GAMES)

- Remove the playfield glass
- Enter the software diagnostics menu, start lamp test, then clean and wax the playfield.
- ◊ While cleaning the playfield, identify and repair malfunctioning lights, loose parts, cracked plastics and worn rubber parts.
- While in diagnostics, enter the switch test (Select the "SW" Icon, then "TEST" Icon).
- ◊ Use a pinball to actuate all switches and verify the correct switch registers with the switch test.
- ◊ The game will play a sound to confirm the switch.
- Lift the playfield and inspect all assemblies for loose parts, broken wires or excessive wear. Look at the bottom of the cabinet for any parts that may have worked loose, then find the source.
- Check all coin door mechanisms and bill acceptor (if installed) for proper operation
- Play the game to ensure all coils and features are working
- Check the playfield to ensure it is level and set to the proper pitch using the bubble level on the right side wood rail.
- Check game audits: Replay % and Ball Time and note abnormal values which can indicate problems.
- Ensure game volume is set appropriately for the location.
- Clean both sides of the playfield glass and reinstall.
- Check and clean pinballs and replace if excessively worn or scuffed. Dirty pinballs accelerate game wear.

OVERHAUL MAINTENANCE (5000 GAMES)

- Verify latest game software is installed
- Check flippers for excessive wear. Excessive flipper sloppiness (vertical or horizontal) or weakness indicates a flipper rebuild is required.
- Clean machine inside and out and check leg levelers for free operation.
- Visual check for loose or broken playfield and cabinet parts and repair as necessary.
- Electrical check: Plug into grounded outlet and check for proper operation through DIAGNOSTICS.
- Replace worn or dirty rubbers.
- Replace pinballs.
- Check all playfield switches with a pinball.
- Check all settings (refer to manual for factory settings).
- Check coin door: With door closed, insert coins to verify proper operation.
- Check for proper adjustment of the plumb bob tilt.
- Play game: Check for satisfactory operation.

COMMON PINBALL TOOLS

- Common nut drivers (¼”, 5/16”, 11/32", ⅜”)
- Phillips screwdriver
- Standard Allen wrench/Hex key set
- ⅝” Socket with ratchet
- Adjustable wrench (5/8" & 9/16")
- 6" Torpedo Level (or use a pinball
- Flashlight or headlamp
- Soldering Iron (60w with flat tip), lead-free solder
- Wire cutter
- Wire stripper
- Long nose (“needle nose”) pliers

1.5 MAINTENANCE KITS

Description	Part Number
AC/DC Pro Maintenance Kit 8 oz pinball playfield wax (Novus # 2) (675-0003-01) Standard Pinball (260-5000-00) Cleaning Cloth All Playfield Rubber Rings Spare Fuses	502-6002-C0
AC/DC Pro Deluxe Maintenance Kit All standard kit items, plus: Flipper rebuild kits, Left and Right (500-6307-10,-00)	502-6003-C0
AC/DC Pro Playfield Plastics Set	830-6151-XX
AC/DC Pro Playfield Decals Set	820-7000-XX 820-8353-XX
AC/DC Pro Backbox Decal Left	820-66C0-01
AC/DC Pro Backbox Decal Right	820-66C0-02
AC/DC Pro Cabinet Decal Left	820-66C0-03
AC/DC Pro Cabinet Decal Right	820-66C0-04
AC/DC Pro Cabinet Decal Front	820-66C0-05
AC/DC Pro Playfield, Bare	830-5100-M5
AC/DC Pro Playfield, Populated	505-6004-C0
AC/DC Pro Translite	830-52C0-00
Pinballs (4)	260-5000-00

1.6 COMMON PARTS

Description	Part Number
8 oz Pinball Playfield wax (Novus # 2)	675-0003-01
Standard Pinball, 1-1/16 in	260-5000-00
Flipper Rebuild Kit Left (Standard)	500-6307-10
Flipper Base Plate Kit Left	515-6617-01
Flipper Rebuild Kit Right	500-6307-00
Flipper Base Plate Kit Right	515-6617-00

1.7 UPDATING GAME CODE FOR THE S.A.M. SYSTEM

Game code is subject to change. Update this game with the latest code downloaded from our website, from another game, or order from your local distributor.

Upon powering up, the display will describe the version of code installed in your game. When directed to do so (via Service Bulletin or website announcment) you will need to update your code with the boot flash EPROM installed, here's how:

STEP 1
Open the backbox and locate the 8-position DIP switch (SW1 on the CPI/Sound board)

STEP 2
Switch DIP switch #8 to 'ON' (Boot flash EPROM must be installed)

STEP 3
Press the white reset button (S1 RESET on the CPU/Sound board) or power cycle the game OFF/ON (ON/OFF switch is located on the outside of the cabinet bottom, front right).

STEP 4
Using the 4-button service switch set (inside the coin door):
4A: Press [SELECT] to begin.
4B: With the "UPDT" icon highlighted, press [SELECT].
4C: Insert the memory stick (with the latest files) into the USB port.
4D: If more than one file is present on the memory stick, press [<] or [>] to locate your file. Press [SELECT] to update.
4E: Follow on-screen prompts.

Green Button
Press to escape back (or exit)

Red Buttons
Press to move <Left, Right>. Press to - Decrease or + Increase values or to change settings.

CPU/SOUND BOARD (S.A.M. SYSTEM)

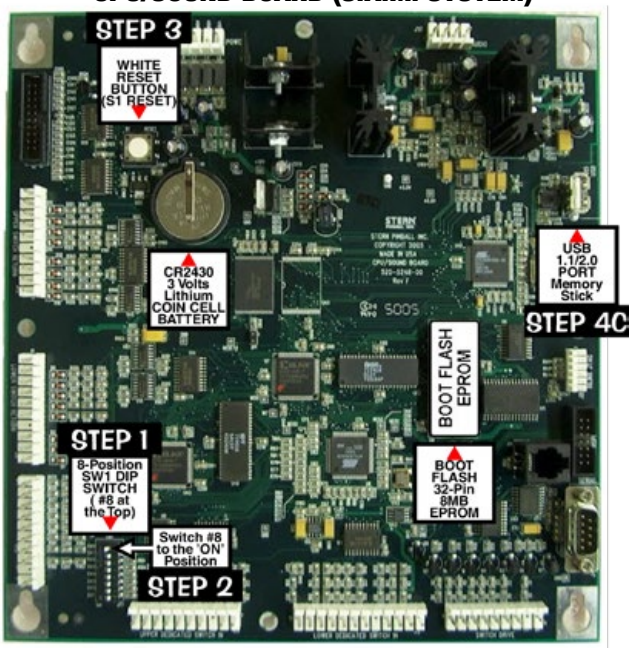

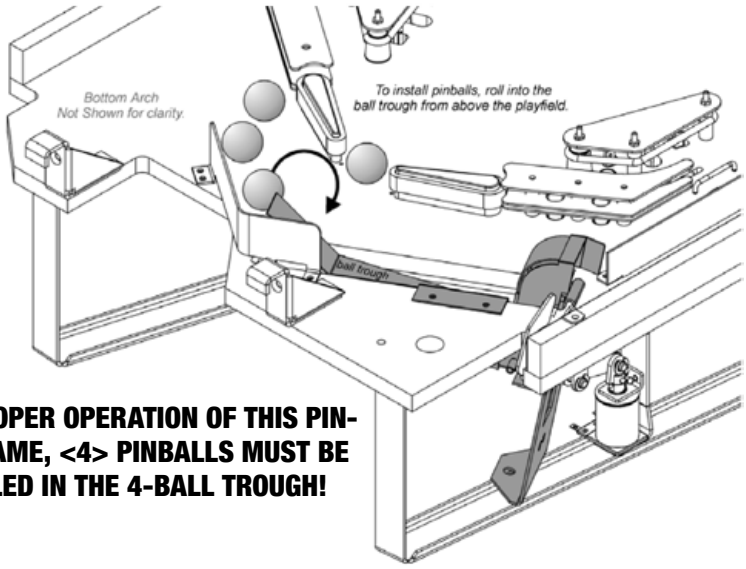

FOR PROPER OPERATION OF THIS PINBALL GAME, <4> PINBALLS MUST BE INSTALLED IN THE 4-BALL TROUGH!

1.8 FUSES AND CABINET SWITCHES

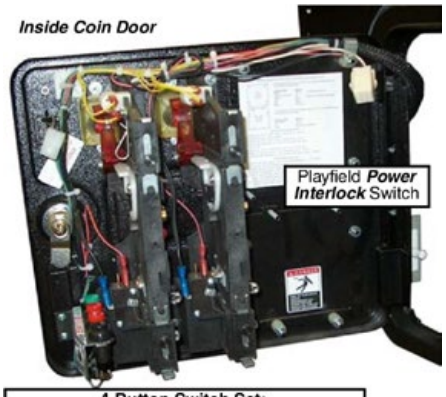

4-Button Switch Set:
*For operational usage, see Sec. **3**, Chapter **1**, **Service Menu Introduction**.*

QUICK REFERENCE FUSE CHART

3/4A S.B. 200-5000-17 | **3A** S.B. 200-5000-08 | **4A** S.B. 200-5000-06 | **5A** S.B. 200-5000-01 | **7A** S.B. 200-5000-03 | **8A** S.B. 200-5000-05

BACKBOX FUSES
I/O POWER DRIVER BOARD
*with **RED LED** STATUS INDICATORS (if any **RED LED** is **OFF**, check the fuse)*

F1	5A S.B.	5.7VAC	G.I. Lamps	[BROWN-WHITE⇆WHT-BRN]
F2	5A S.B.	5.7VAC	G.I. Lamps	[YELLOW⇆WHITE-YEL Circuit]
F3	5A S.B.	5.7VAC	G.I. Lamps	[GREEN⇆WHITE-GRN Circuit]
F4	5A S.B.	5.7VAC	G.I. Lamps	[VIOLET⇆WHITE-VIO Circuit]
F5	7A S.B.	50VDC	Coils / Flippers	[48VAC *feed to* BRDG 1]
F6	3A S.B.	24VAC	Motor or *Special Application*	
F7	4A S.B.	50VDC	Magnet(s) or *Special Application*	
F8	3A S.B.	50VDC	Coils	
F9	8A S.B.	18VDC	Control Lamps	[13VAC *feed to* BRDG 4]
F10	5A S.B.	20VDC	Coils / Flashers	[16VAC *feed to* BRDG 2]
F11	4A S.B.	5VDC	Logic Power	[8VAC *feed to* BRDG 5]
F12	5A S.B.	12VDC	Audio / Switches	[19VAC *feed to* BRDG 3]
F13	5A S.B.	12VDC	Audio / Switches	[19VAC *feed to* BRDG 3]

CABINET FUSES
POWER (SERVICE OUTLET) BOX
(Access through Coin Door inside cabinet, front bottom.)

8A S.B.	110-120V Main Line	*US / Canada / Japan*
5A S.B.	220-240V Main Line	*International*

PLAYFIELD FUSES
FLIPPER OR SPECIAL APPLICATION
(Coil Fuses are located under the playfield near assembly.)

3A S.B.	50VDC	R. Flipper	[BLU-YEL⇆RED-YEL]
3A S.B.	50VDC	L. Flipper	[GRY-YEL⇆RED-YEL]
3A S.B.	50VDC	*Additional Flipper Coil, if used.*	
3A S.B.	50VDC	*Spcl. Application Coil, if used.*	

*For location & more details on fuses, see Sec. **5**, Chp. **2**.*

Stern Pinball®, Inc. ©2006 **820-6384-00** Rev. A.

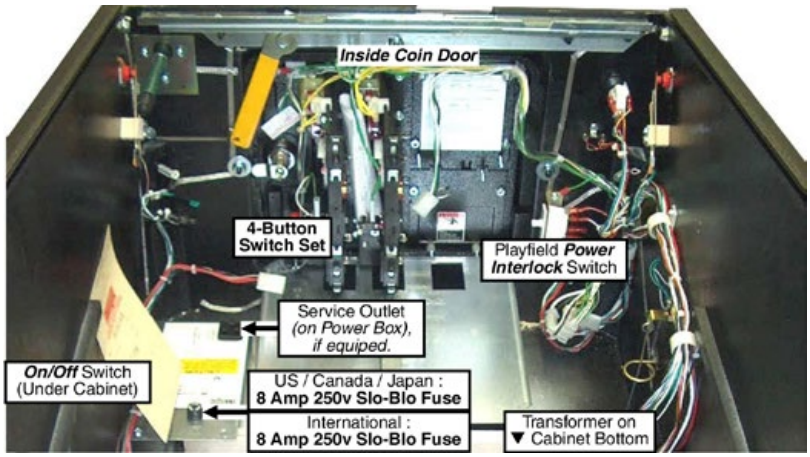

1.9 SERVICE SWITCH & CPU DIP SWITCH SETTINGS

SERVICE SWITCH X4 SET OVERVIEW

Open the coin door to access the service switch X4 set.

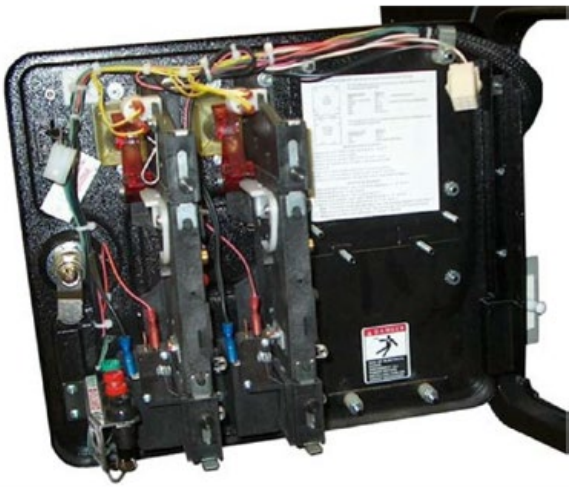

The fours buttons (inside the coin door) have dual functions depending on if you have entered the Service Menu or not.

FUNCTIONS IN GAME OR ATTRACT MODE

Green Button	Red Buttons	Black Button
Press for Service Credit(s).	Press for Volume Adjustment *- for less (quieter)* *+ for more (louder)*	Press for Service Menu entry.

FUNCTIONS IN THE SERVICE MENU

Green Button	Red Buttons	Black Button
Press to Escape Back (or Exit).	Press to move < Left , Right > Press to - Decrease or + Increase values or to change settings.	Press to Enter Select (or 'OK').

EXAMPLE

To enter the Service Menu, then enter the Switch Test Menu via the Diagnostics Menu, perform the below steps.

STEP 1
Press [Select].

STEP 2
With the "DIAG" icon hightlighted, press [Select].

STEP 3
With the "SW" icon highlighted, press [Select].

STEP 4
With the "TEST" icon highlighted, press [Select].

Press any switch. If wired correctly, the information in the display will match the information in the Switch Matrix.

Press [<] or [>] to move left or right through the menus.

Press [Back] to get back a menu, exit, or escape at any time.

1.10 DIAGNOSTIC AIDS

```
50V / 20V DISABLED
CLOSE COIN DOOR
OR PULL INTERLOCK SWITCH
TO RESTORE POWER
```

This audible/visual alert display is shown when the 50V/20V power is disabled (by opening the coin door). Pull out the interlock switch only while in the service menu for coil, switch, or play testing when the coin door is required to stay open for service button use! Pulling out the power interlock switch or pressing the 'escape' green [BACK] button will remove the alert display. Initial display presentation is accompanied by 3 audible tones (the bright display warning will go dim after approximately 30 seconds).

```
OPERATOR ALERT!
AUTO PLUNGER
DEVICE MALFUNCTION
```

This alert display is shown momentarily during game mode or powering up to alert the operator of a device malfunction (device or mechanism doesn't energize or is energized repeatedly). OPERATOR ALERT! works by monitoring any switch activated device that has the potential to trap a ball when disabled (e.g. in the shooter lane, scoop, or eject holes, etc.). This alert can also appear if a switch associated with a device (e.g. ball trough, auto plunger, etc.) is stuck closed (caused by a switch jam or stuck ball); the game will activate the device a predetermined number of times and if the problem is still detected, this device or switch will be noted in Switch Alerts and/or Technical Alerts.

```
GAME NAME
V0.00      SYS. 0.00      HDW. 0
SERVICE MENU *
USE -/+ TO VIEW TECH. ALERTS
```

Upon entering the service menu, if an asterisk " * " is displayed after the words "SERVICE MENU", the game has detected possible fualty devices, switched, and/or missing pinballs. Press either of the red buttons (short-cut to the technical alerts menu) or continue into the service menu (press the black button again), select the "DIAG" icon and "TECH" icon or the technical alerts information.

1.11 CPU DIP SWITCH SETTINGS

CPU COUNTRY SETTING:	Pos.	1	2	3	4	5	6	7	8
USA	ON								
	OFF	▼	▼	▼	▼	▼	▼	▼	▼

CPU COUNTRY SETTING:	Pos.	1	2	3	4	5	6	7	8
Austria	ON	▲							
	OFF		▼	▼	▼	▼	▼	▼	▼

CPU COUNTRY SETTING:	Pos.	1	2	3	4	5	6	7	8
Australia	ON	▲		▲	▲				
	OFF		▼			▼	▼	▼	▼

CPU COUNTRY SETTING:	Pos.	1	2	3	4	5	6	7	8
Belgium	ON		▲						
	OFF	▼		▼	▼	▼	▼	▼	▼

CPU COUNTRY SETTING:	Pos.	1	2	3	4	5	6	7	8
Canada 1	ON	▲	▲						
	OFF			▼	▼	▼	▼	▼	▼

CPU COUNTRY SETTING:	Pos.	1	2	3	4	5	6	7	8
Canada 2	ON		▲		▲	▲			
	OFF	▼		▼			▼	▼	▼

CPU COUNTRY SETTING:	Pos.	1	2	3	4	5	6	7	8
Croatia	ON		▲	▲		▲			
	OFF	▼			▼		▼	▼	▼

CPU COUNTRY SETTING:	Pos.	1	2	3	4	5	6	7	8
Denmark	ON	▲			▲				
	OFF		▼	▼		▼	▼	▼	▼

CPU COUNTRY SETTING:	Pos.	1	2	3	4	5	6	7	8
Finland	ON	▲		▲					
	OFF		▼		▼	▼	▼	▼	▼

CPU COUNTRY SETTING:	Pos.	1	2	3	4	5	6	7	8
France	ON		▲	▲					
	OFF	▼			▼	▼	▼	▼	▼

CPU COUNTRY SETTING:	Pos.	1	2	3	4	5	6	7	8
Germany	ON	▲	▲	▲					
	OFF				▼	▼	▼	▼	▼

CPU COUNTRY SETTING:	Pos.	1	2	3	4	5	6	7	8
Greece	ON	▲	▲	▲	▲				
	OFF					▼	▼	▼	▼

CPU COUNTRY SETTING:	Pos.	1	2	3	4	5	6	7	8
Italy	ON				▲				
	OFF	▼	▼	▼		▼	▼	▼	▼

CPU COUNTRY SETTING:	Pos.	1	2	3	4	5	6	7	8
Japan	ON	▲		▲		▲			
	OFF		▼		▼		▼	▼	▼

CPU COUNTRY SETTING:	Pos.	1	2	3	4	5	6	7	8
Middle East	ON	▲	▲	▲		▲			
	OFF				▼		▼	▼	▼

CPU COUNTRY SETTING:	Pos.	1	2	3	4	5	6	7	8
Netherlands	ON			▲					
	OFF	▼	▼		▼	▼	▼	▼	▼

CPU COUNTRY SETTING:	Pos.	1	2	3	4	5	6	7	8
New Zealand	ON					▲			
	OFF	▼	▼	▼	▼		▼	▼	▼

CPU COUNTRY SETTING:	Pos.	1	2	3	4	5	6	7	8
Norway	ON		▲		▲				
	OFF	▼		▼		▼	▼	▼	▼

CPU COUNTRY SETTING:	Pos.	1	2	3	4	5	6	7	8
Portugal	ON	▲				▲			
	OFF		▼	▼	▼		▼	▼	▼

CPU COUNTRY SETTING:	Pos.	1	2	3	4	5	6	7	8
Russia	ON	▲			▲	▲			
	OFF		▼	▼			▼	▼	▼

CPU COUNTRY SETTING:	Pos.	1	2	3	4	5	6	7	8
So. Africa	ON			▲		▲			
	OFF	▼	▼		▼		▼	▼	▼

CPU COUNTRY SETTING:	Pos.	1	2	3	4	5	6	7	8
Spain	ON	▲	▲			▲			
	OFF	▼		▼	▼		▼	▼	▼

CPU COUNTRY SETTING:	Pos.	1	2	3	4	5	6	7	8
Sweden	ON	▲	▲		▲				
	OFF			▼		▼	▼	▼	▼

CPU COUNTRY SETTING:	Pos.	1	2	3	4	5	6	7	8
Switzerland	ON			▲	▲				
	OFF	▼	▼			▼	▼	▼	▼

CPU COUNTRY SETTING:	Pos.	1	2	3	4	5	6	7	8
Taiwan	ON				▲	▲			
	OFF	▼	▼	▼			▼	▼	▼

CPU COUNTRY SETTING:	Pos.	1	2	3	4	5	6	7	8
UK	ON		▲	▲	▲				
	OFF	▼				▼	▼	▼	▼

CPU/SND PCB SETTING:	Pos.	1	2	3	4	5	6	7	8
UPDATE CODE	ON								▲
	OFF	▼	▼	▼	▼	▼	▼	▼	

SWITCH MATRIX GRID [#1 – #64] {Switch Locations : next page}

CPU/ Sound Board	01 IC-U22A RETURN▲ WHT-BRN J6-P9	02 IC-U22B RETURN▲ WHT-RED J6-P8	03 IC-U22C RETURN▲ WHT-ORG J6-P7	04 IC-U22D RETURN▲ WHT-YEL J6-P6	05 IC-U16A RETURN▲ WHT-GRN J6-P5	06 IC-U16B RETURN▲ WHT-BLU J6-P3	07 IC-U16C RETURN▲ WHT-VIO J6-P2	08 IC-U16D RETURN▲ WHT-GRY J6-P1	09 IC-U36A RETURN▲ TAN-BLK J12-P9	10 IC-U36B RETURN▲ TAN-RED J12-P8	11 IC-U36C RETURN▲ TAN-ORG J12-P7	12 IC-U36D RETURN▲ TAN-YEL J12-P6	13 IC-U40A RETURN▲ TAN-GRN J12-P4	14 IC-U40B RETURN▲ TAN-BLU J12-P3	15 IC-U40C RETURN▲ TAN-VIO J12-P2	16 IC-U40D RETURN▲ TAN-WHT J12-P1
01 Q1 DRIVE ▶ GRN-BRN J1-P1	SW. # 1 (A)C/DC 180-5207-00 below playfield	SW. # 2 A(C)/DC 180-5207-00 below playfield	SW. # 3 AC(/)DC 180-5207-00 below playfield	SW. # 4 AC/(D)C 180-5207-00 below playfield	SW. # 5 AC/D(C) 180-5207-00 below playfield	SW. # 6 (R)OCK 180-5207-00 below playfield	SW. # 7 R(O)CK 180-5207-00 above playfield	SW. # 8 RO(C)K 180-5207-00 below playfield	SW. # 9 ROC(K) 180-5207-00 below playfield	SW. # 10 (T.)N.T. 180-5207-00 below playfield	SW. # 11 T.(N.)T. 180-5207-00 below playfield	SW. # 12 T.N.(T.) 180-5207-00 below playfield	SW. # 13 L. RAMP EXIT 180-5087-00 above playfield	SW. # 14 L.RAMP ENTER 180-5087-00 above playfield	SW. # 15 TOURNA-MENT START CABINET 180-5174-00 In Cabinet	SW. # 16 START BUTTON CABINET 180-5174-00 In Cabinet
02 Q2 DRIVE ▶ GRN-RED J1-P3	SW. # 17 NOT USED	SW. # 18 (4-BALL) TROUGH #4 (L) 180-5119-02 below playfield	SW. # 19 (4-BALL) TROUGH #3 180-5119-02 below playfield	SW. # 20 (4-BALL) TROUGH #2 180-5119-02 below playfield	SW. # 21 (VUK OPTO) TROUGH #1 (R) TRANS. / REC. TX 515-0173-00 RX 515-0174-00	SW. # 22 (STACK OPTO) *TROUGH JAM* TRANS. / REC. TX 515-0173-00 RX 515-0174-00	SW. # 23 SHOOTER LANE 180-5157-01 below playfield	SW. # 24 LEFT OUTLANE 500-6227-03 below playfield	SW. # 25 LEFT RETURN LANE 500-6227-03 below playfield	SW. # 26 LEFT SLING-SHOT 180-5054-00 *2 per Asm.*	SW. # 27 RIGHT SLING-SHOT 180-5054-00 *2 per Asm.*	SW. # 28 RIGHT RETURN LANE 500-6227-03 below playfield	SW. # 29 RIGHT OUTLANE 500-6227-03 below playfield	SW. # 30 LEFT BUMPER 180-5015-04 below playfield	SW. # 31 RIGHT BUMPER 180-5015-04 below playfield	SW. # 32 BOTTOM BUMPER 180-5015-04 below playfield
03 Q3 DRIVE ▶ GRN-ORG J1-P4	SW. # 33 L. LOOP SPINNER 180-5087-00 above playfield	SW. # 34 L. RAMP STANDUP (L) 180-5208-00 below playfield	SW. # 35 L. RAMP STANDUP (R) 180-5208-00 below playfield	SW. # 36 TOP EJECT 180-5207-00 below playfield	SW. # 37 LEFT TOP LANE 500-6227-03 below playfield	SW. # 38 CENTER TOP LANE 500-6227-03 below playfield	SW. # 39 RIGHT TOP LANE 500-6227-03 below playfield	SW. # 40 R.RAMP ENTER 180-5087-00 below playfield	SW. # 41 R.RAMP STANDUP 180-5208-00 below playfield	SW. # 42 R.RAMP EXIT 180-5087-00 above playfield	SW. # 43 LEFT LOOP 180-5087-00 above playfield	SW. # 44 CANNON EJECT 180-5119-02 above playfield	SW. # 45 NOT USED	SW. # 46 NOT USED	SW. # 47 NOT USED	SW. # 48 SKILL SHOT 500-6227-03 below playfield
04 Q4 DRIVE ▶ GRN-YEL J1-P5	SW. # 49 NOT USED	SW. # 50 NOT USED	SW. # 51 NOT USED	SW. # 52 NOT USED	SW. # 53 NOT USED	SW. # 54 NOT USED	SW. # 55 NOT USED	SW. # 56 NOT USED	SW. # 57 NOT USED	SW. # 58 NOT USED	SW. # 59 RIGHT LOOP 180-5087-00 above playfield	SW. # 60 NOT USED	SW. # 61 CANNON HOME 180-5119-02 below playfield	SW. # 62 CANNON MARK 520-5292-00 below playfield	SW. # 63 NOT USED	SW. # 64 FIRE BUTTON CABINET 180-5218-00 In Cabinet

Wire Color Abbreviations used: BLK Black, BLU Blue, BRN Brown, GRY Gray, GRN Green, LGN Light Grn., ORG Orange, PNK Pink, RED Red, TAN Tan, VIO Violet, WHT White, YEL Yellow

Dedicated Switches [#D-1 – #D-32] {Dedicated Switch Locations : next page}

CPU/SND Board	IC-U2 PNK-BRN J2-P2	IC-U2 PNK-RED J2-P3	IC-U2 PNK-ORG J2-P4	IC-U2 PNK-YEL J2-P6	IC-U2 PNK-GRN J2-P7	IC-U2 PNK-BLU J2-P8	IC-U2 PNK-VIO J2-P9	IC-U2 PNK-GRY J2-P10	IC-U4 GRY-BRN J3-P1	IC-U4 GRY-RED J3-P2	IC-U4 GRY-ORG J3-P4	IC-U4 GRY-YEL J3-P5	IC-U4 GRY-GRN J3-P6	IC-U4 GRY-BLU J3-P7	IC-U4 GRY-VIO J3-P8	IC-U4 GRY-BLK J3-P9
GROUND (BLK) J2-P1/11 & J3-P10	SW. D-1 LEFT COIN SLOT 180-5204-00 *Coin Door*	SW. D-2 CENTER COIN SLOT 180-5204-00 *Coin Door*	SW. D-3 RIGHT COIN SLOT 180-5204-00 *Coin Door*	SW. D-4 FOURTH COIN SLOT 180-5204-00 *Coin Door*	SW. D-5 FIFTH COIN SLOT IF USED	SW. D-6 NOT USED	SW. D-7 NOT USED	SW. D-8 NOT USED	SW. D-9 L. (EFT) FLIPPER BUTTON 500-6890-01 *Cabinet Side*	SW. D-10 LEFT FLIPPER E.O.S. 180-5149-00 *Flipper Asm.*	SW. D-11 R. (IGHT) FLIPPER BUTTON 500-6889-01 *Cabinet Side*	SW. D-12 RIGHT FLIPPER E.O.S. 180-5149-00 *Flipper Asm.*	SW. D-13 NOT USED	SW. D-14 NOT USED	SW. D-15 NOT USED	SW. D-16 NOT USED

CPU/SND Board	IC-41 LGN-BRN J13-P1	IC-41 LGN-RED J13-P3	IC-41 LGN-ORG J13-P4	IC-41 LGN-YEL J13-P5	IC-41 LGN-BLK J13-P6	IC-41 LGN-BLU J13-P7	IC-41 LGN-VIO J13-P8	IC-41 LGN-GRY J13-P9
GROUND (BLK) J13-P10	SW. D-17 TILT PENDULUM (PLUMB BOB)	SW. D-18 SLAM TILT OPTIONAL 502-5032-00 *Optional Kit*	SW. D-19 TICKET NOTCH IF USED 180-5119-02 *Below P/F*	SW. D-20 NOT USED	SW. D-21 BACK (GREEN BUTTON) 180-5192-04 *Coin Door*	SW. D-22 MINUS (< / – RED BUTTON) 180-5192-02 *Coin Door*	SW. D-23 PLUS (+ / > RED BUTTON) 180-5192-02 *Coin Door*	SW. D-24 SELECT (BLACK BUTTON) 180-5192-00 *Coin Door*

CPU/SOUND BD. SW1 DIP SWITCH ***(located between Connectors J3/J13)***

SW. D-25	SW. D-26	SW. D-27	SW. D-28	SW. D-29	SW. D-30	SW. D-31	SW. D-32
DIP SWITCH POSITION #1 ON / OFF	DIP SWITCH POSITION #2 ON / OFF	DIP SWITCH POSITION #3 ON / OFF	DIP SWITCH POSITION #4 ON / OFF	DIP SWITCH POSITION #5 ON / OFF	DIP SWITCH POSITION #6 ON / OFF	DIP SWITCH POSITION #7 ON / OFF	DIP SWITCH POSITION #8 ON / OFF

1.12 SWITCH LOCATIONS

Switch Menu: Switch, Active, Single, & Service

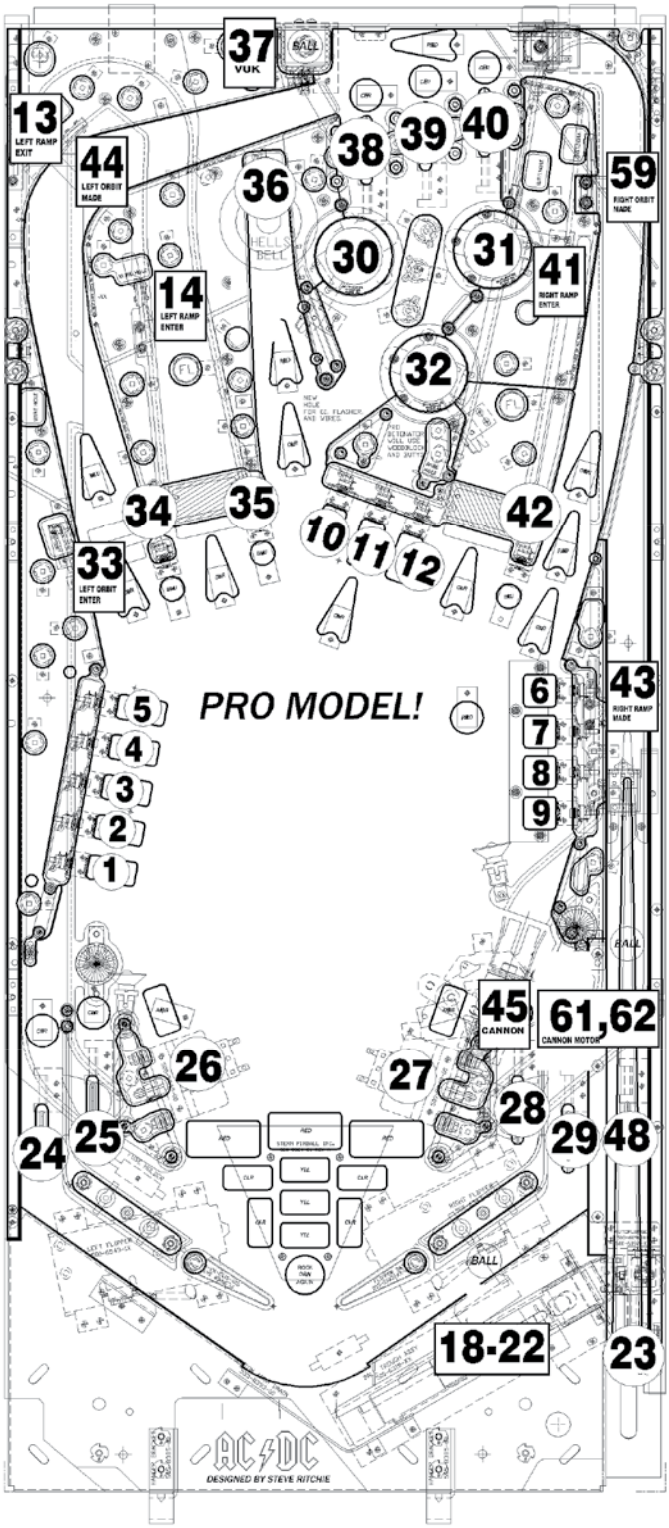

64 = Fire button

15 = Tournament Start

16 = Start

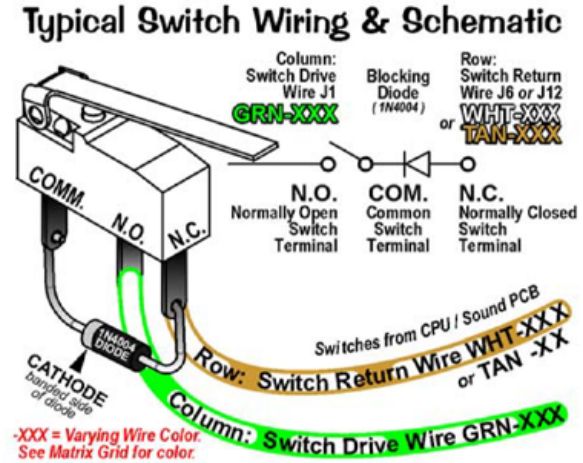

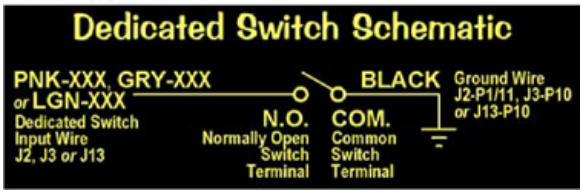

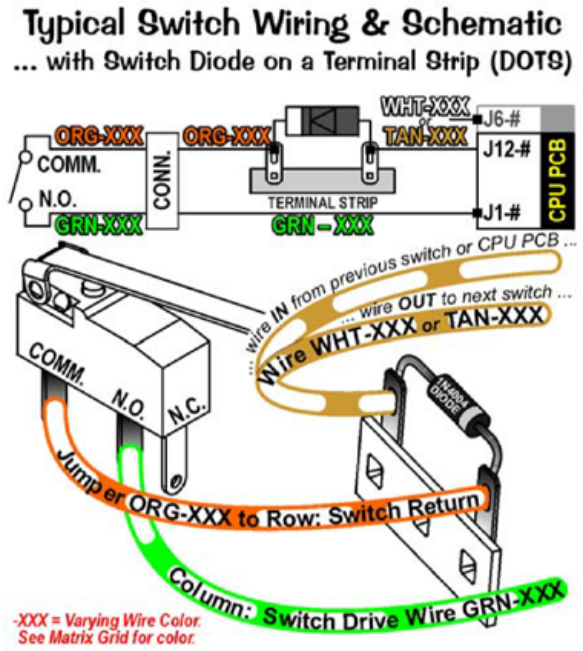

[C. = CENTER] [L. = LEFT] [R. = RIGHT]

LAMP MATRIX GRID [#1 – #80] {Lamp Locations : next page}

I / O Power Driver Board	01 IC-U17 18VDC YEL-BRN J13-P9	02 IC-U16 18VDC YEL-RED J13-P8	03 IC-U15 18VDC YEL-ORG J13-P7	04 IC-U14 18VDC YEL-BLK J13-P6	05 IC-U13 18VDC YEL-GRN J13-P5	06 IC-U12 18VDC YEL-BLU J13-P4	07 IC-U11 18VDC YEL-VIO J13-P3	08 IC-U10 18VDC YEL-GRY J13-P1
01 Q33 GROUND RED-BRN J12-P1	LED # 1 START BUTTON 112-5033-08	LED # 2 TOURNAMENT START BUTTON 112-5033-08	LED # 3 LEFT OUTLANE 112-5033-08	LED # 4 LEFT RETURN LANE 112-5033-08	LED # 5 2X 112-5033-08	LED # 6 3X 520-5307-00	LED # 7 RIGHT RETURN LANE 520-5307-00	LED # 8 RIGHT OUTLANE 112-5034-08
02 Q34 GROUND RED-BLK J12-P2	LED # 9 AC/D(C) 112-5033-08	LED # 10 AC/(D)C 112-5033-08	LED # 11 AC(/)DC 112-5033-08	LED # 12 A(C)/DC 112-5033-08	LED # 13 (A)C/DC 112-5033-08	# 14 NOT USED	# 15 NOT USED	# 16 NOT USED
03 Q35 GROUND RED-ORG J12-P3	# 17 NOT USED	LED # 18 L. LOOP ARROW (WHT. / NOTE) 112-5033-08	LED # 19 L. RAMP STANDUP (L) 112-5034-08	LED # 20 L. RAMP ARROW (WHT. / NOTE) 112-5033-08	LED # 21 L. RAMP STANDUP (R) 112-5034-08	LED # 22 (T.)N.T. 112-5033-08	LED # 23 T.(N.)T. 112-5033-08	LED # 24 T.N.(T.) 112-5033-08
04 Q36 GROUND RED-YEL J12-P4	LED # 25 T.N.T. ARROW (WHT. / NOTE) 112-5033-08	LED # 26 R. RAMP ARROW (WHT. / NOTE) 112-5033-08	LED # 27 EXTRA BALL 112-5033-08	LED # 28 R. LOOP ARROW (RED / HORNS) 112-5033-08	LED # 29 R. LOOP ARROW (WHT. / NOTE) 112-5033-08	LED # 30 (R)OCK 112-5033-08	LED # 31 R(O)CK 112-5033-08	LED # 32 RO(C)K 112-5033-08
05 Q37 GROUND RED-GRN J12-P5	LED # 33 ROC(K) 112-5033-08	LED # 34 SPECIAL 112-5033-08	LED # 35 BELL ARROW (RED / HORNS) 112-5033-08	LED # 36 BELL ARROW (WHT. / NOTE) 112-5033-08	LED # 37 LEFT TOP LANE 112-5033-08	LED # 38 CENTER TOP LANE 112-5033-08	LED # 39 RIGHT TOP LANE 112-5033-08	LED # 40 TUNES N STUFF 112-5033-08
06 Q38 GROUND RED-BLU J12-P6	LED # 41 JAM MULTIBALL 112-5033-08	LED # 42 SUPER TARGETS 112-5033-08	LED # 43 SUPER LANES 112-5033-08	LED # 44 ALBUM MULTIBALL 112-5033-08	LED # 45 CANNON FODDER 112-5033-08	LED # 46 CANNON VOLLEY 112-5033-08	LED # 47 CANNON CHAOS 112-5033-08	LED # 48 ROCK AGAIN 112-5033-08
07 Q39 GROUND RED-VIO J12-P8	LED # 49 TOUR MULTIBALL 112-5033-08	LED # 50 SUPER COMBOS 112-5033-08	LED # 51 SUPER LOOPS 112-5033-08	LED # 52 L. LOOP ARROW (RED / HORNS) 112-5033-08	LED # 53 YOU SHOOK ME ALL NIGHT LONG 112-5034-08	LED # 54 HIGHWAY TO HELL 112-5034-08	LED # 55 ROCK-N-ROLL TRAIN 112-5034-08	LED # 56 WHOLE LOTTA ROSIE 112-5034-08
08 Q40 GROUND RED-GRY J12-P9	LED # 57 JUKEBOX HORN (L) 112-5034-02	LED # 58 JUKEBOX HORN (R) 112-5034-02	# 59 NOT USED	LED # 60 LEFT BUMPER 112-5024-08	LED # 61 RIGHT BUMPER 112-5024-08	LED # 62 BOTTOM BUMPER 112-5024-08	LED # 63 FIRE BUTTON 520-5333-00	LED # 64 R. RAMP STANDUP 112-5034-08
09 Q41 GROUND RED-WHT J12-P10	LED # 65 HELLS BELLS 112-5034-08	LED # 66 THUNDERSTRUCK 112-5034-08	LED # 67 BACK IN BLACK 112-5034-08	LED # 68 WAR MACHINE 112-5034-08	LED # 69 FOR THOSE ABOUT TO ROCK 112-5034-08	LED # 70 T.N.T. 112-5034-08	LED # 71 HELL AIN'T A BAD PLACE TO BE 112-5034-08	LED # 72 LET THERE BE ROCK 112-5034-08
10 Q42 GROUND RED J12-P11	# 73 NOT USED	# 74 NOT USED	# 75 NOT USED	# 76 NOT USED	# 77 NOT USED	# 78 NOT USED	# 79 NOT USED	# 80 NOT USED

Wire Color Abbreviations used: BLK Black, BLU Blue, BRN Brown, GRY Gray, GRN Green, ORG Orange, RED Red, VIO Violet, WHT White, YEL Yellow

1.13 LAMP LOCATIONS

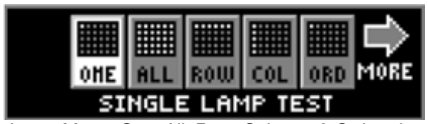

Lamp Menu: One, All, Row, Column, & Ordered

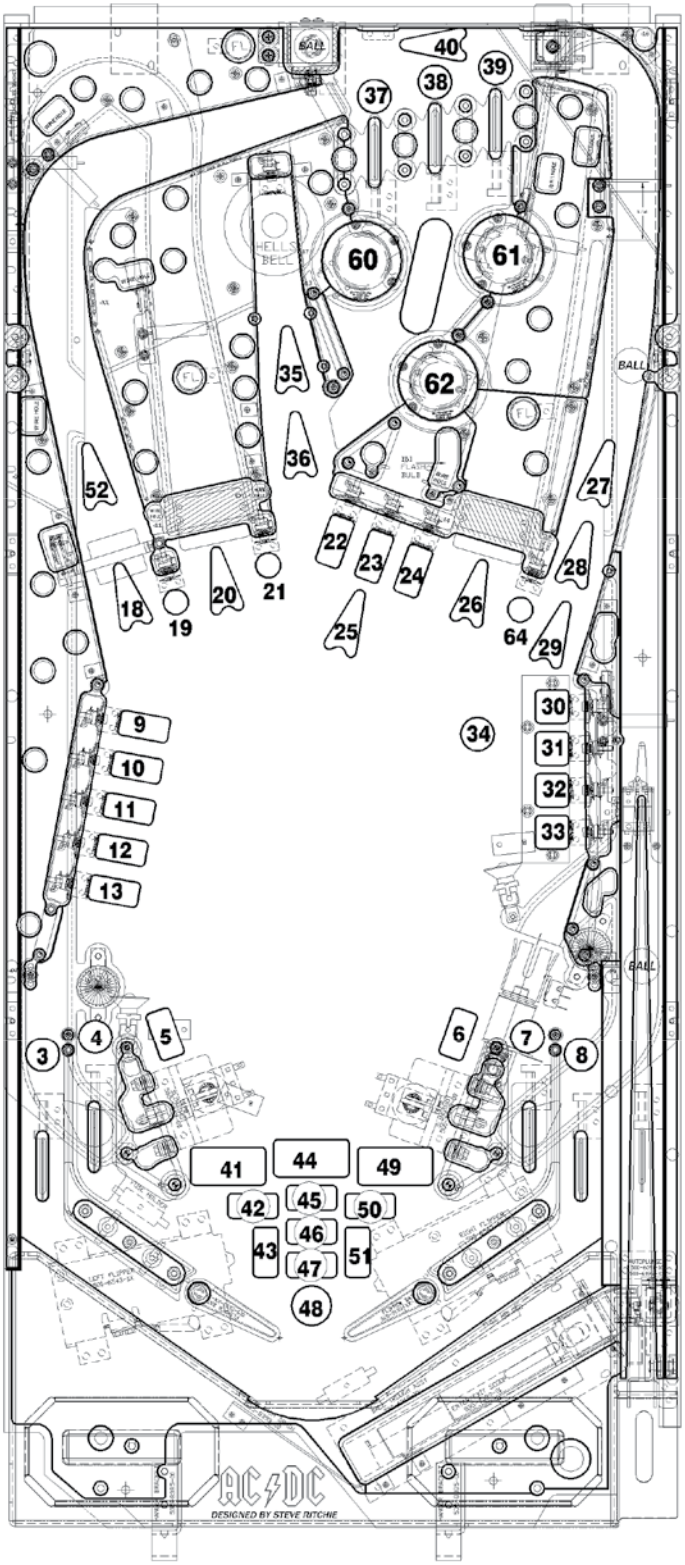

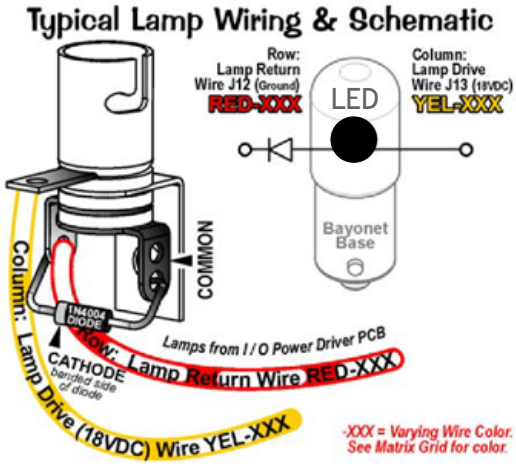

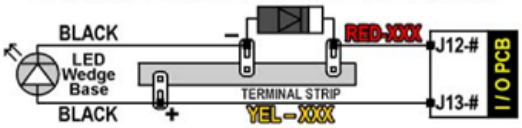

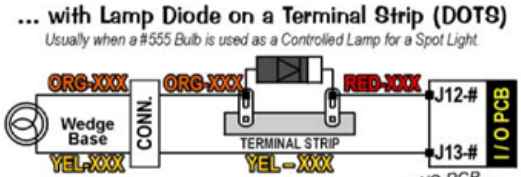

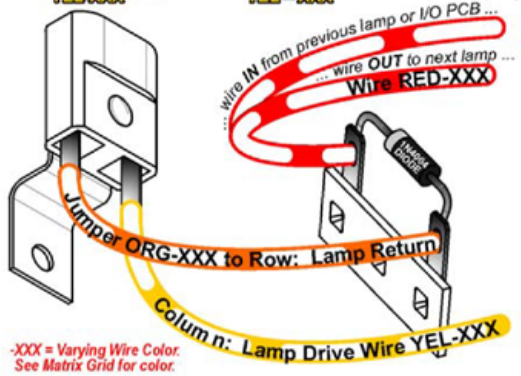

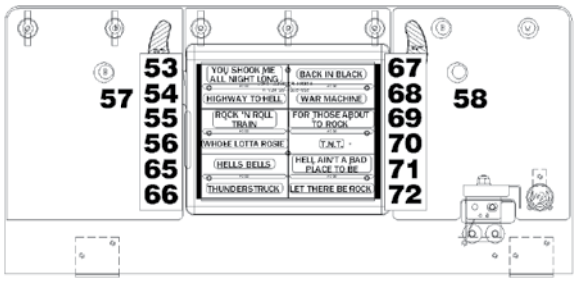

	High Current Coils Group 1	Drive Transistor	Driver Ouput PCB	Power Line Color	Power Line Connection	Power Voltage	Drive Transistor Control Line Color	D.T. Control Line Connect	Coil GA-Turn or Bulb Type
#1	TROUGH UP-KICKER	Q1	▲ I/O Power Driver ▼	YEL-VIO	J10-P9/10	50VDC	BRN-BLK	J8-P1	26-1200 ↻ 090-5044-ND
#2	AUTO LAUNCH	Q2		YEL-VIO	J10-P9/10	50VDC	BRN-RED	J8-P3	23-800 ↻ 090-5001-ND
#3	CANNON EJECT	Q3		YEL-VIO	J10-P9/10	50VDC	BRN-ORG	J8-P4	23-800 ↻ 090-5001-ND
#4	RIGHT RAMP DIVERTER	Q4		YEL-VIO	J10-P9/10	50VDC	BRN-YEL	J8-P5	32-1800 ↻ 515-6595-01-ND
#5	RIGHT CONTROL GATE	Q5		YEL-VIO	J10-P9/10	20VDC	BRN-GRN	J8-P6	32-1250 ↻ 090-5060-01-ND
#6		Q6					BRN-BLU	J8-P7	
#7		Q7					BRN-VIO	J8-P8	
#8	SHAKER MOTOR (OPTIONAL)	Q8		RED-WHT	J17-P7	50VDC	BRN-GRY	J8-P9	S. Motor Kit 502-5027-00
	High Current Coils Group 2	**Drive Transistor**	**Driver Ouput PCB**	**Power Line Color**	**Power Line Connection**	**Power Voltage**	**Drive Transistor Control Line Color**	**D.T. Control Line Connect**	**Coil GA-Turn or Bulb Type**
#9	LEFT POP BUMPER	Q9	▲ I/O Power Driver ▼	YEL-VIO	J10-P9/10	50VDC	BLU-BRN	J9-P1	26-1200 ↻ 090-5044-ND
#10	RIGHT POP BUMPER	Q10		YEL-VIO	J10-P9/10	50VDC	BLU-RED	J9-P2	26-1200 ↻ 090-5044-ND
#11	BOTTOM POP BUMPER	Q11		YEL-VIO	J10-P9/10	50VDC	BLU-ORG	J9-P4	26-1200 ↻ 090-5044-ND
#12	TOP EJECT	Q12		YEL-VIO	J10-P9/10	50VDC	BLU-YEL	J9-P5	23-800 ↻ 090-5001-ND
#13	LEFT SLINGSHOT	Q13		YEL-VIO	J10-P9/10	50VDC	BLU-GRN	J9-P6	26-1200 ↻ 090-5044-ND
#14	RIGHT SLINGSHOT	Q14		YEL-VIO	J10-P9/10	50VDC	BLU-BLK	J9-P7	22-1200 ↻ 090-5044-ND
#15	LEFT FLIPPER (50v RED/YEL)	Q15		GRY-YEL~3A Fuse~RED-YEL	J10-P6/7	50VDC	ORG-GRY	J9-P8	22-1080 ↻ 090-5032-ND
#16	RIGHT FLIPPER (50v RED/YEL)	Q16		BLU-YEL~3A Fuse~RED-YEL	J10-P6/7	50VDC	ORG-VIO	J9-P9	22-1080 ↻ 090-5032-ND
	Low Current Coils Group 1	**Drive Transistor**	**Driver Ouput PCB**	**Power Line Color**	**Power Line Connection**	**Power Voltage**	**Drive Transistor Control Line Color**	**D.T. Control Line Connect**	**Coil GA-Turn or Bulb Type**
#17	TRAIN FLASHER	Q17	▲ I/O Power Driver ▼	ORANGE	J6-P10	20VDC	VIO-BRN	J7-P2	LED 113-5034-08
#18		Q18					VIO-RED	J7-P3	
#19		Q19					VIO-ORG	J7-P4	
#20	LEFT RAMP FLASHER	Q20		ORANGE	J6-P10	20VDC	VIO-YEL	J7-P6	LED 113-5034-08
#21	LEFT SIDE FLASHER	Q21		ORANGE	J6-P10	20VDC	VIO-GRN	J7-P7	LED 113-5034-08
#22	BACK PANEL FLASHER	Q22		ORANGE	J6-P10	20VDC	VIO-BLU	J7-P8	LED 113-5034-08
#23	TOP EJECT FLASHER	Q23		ORANGE	J6-P10	20VDC	VIO-BLK	J7-P9	LED 113-5034-08
#24	OPTIONAL (e.g. COIN METER)	Q24		RED	J16-P4-8	5VDC	VIO-GRY	J7-P10	Optional 5VDC

↻ **Coil Note:** ↻ **-ND** *means 'No Diode'. -00**B** or -00**T** can be used for coil replacements, but the diode must be removed. Call for more info.*

	Low Current Coils Group 2	Drive Transistor	Driver Ouput PCB	Power Line Color	Power Line Connection	Power Voltage	Drive Transistor Control Line Color	D.T. Control Line Connect	Coil GA-Turn or Bulb Type
#25	POP BUMPERS FLASH	Q25	▲ I/O Power Driver ▼	ORANGE	J6-P10	20VDC	BLK-BRN	J6-P1	LED 113-5034-08
#26	BELL ARROW FLASHER	Q26		ORANGE	J6-P10	20VDC	BLK-RED	J6-P2	LED 113-5034-08
#27	LEFT RAMP LEFT SIDE FLASHER	Q27		ORANGE	J6-P10	20VDC	BLK-ORG	J6-P3	LED 112-5041-08
#28	LEFT RAMP RIGHT SIDE FLASHER	Q28		ORANGE	J6-P10	20DC	BLK-YEL	J6-P4	LED 112-5041-08
#29	RIGHT RAMP RIGHT SIDE FLASHER	Q29		ORANGE	J6-P10	20VDC	BLK-GRN	J6-P5	LED 112-5041-08
#30	RIGHT RAMP FLASHER	Q30		ORANGE	J6-P10	20VDC	BLK-BLU	J6-P6	LED 113-5034-08
#31	RIGHT SIDE FLASHER	Q31		ORANGE	J6-P10	20VDC	BLK-VIO	J6-P7	LED 113-5034-08
#32	CANNON MOTOR	Q32		ORANGE	J6-P10	20VDC	BLK-GRY	J6-P8	MOTOR 041-5111-00

Note: *In Test Flash Lamps Menu ("Flash" Icon), only Flashers are tested in numeric order.* ***This Game:*** *Q21, Q23, Q25 – Q31*

	If Ticket Meter / Dispenser Installed :	Drive Trans.	Driver Ouput PCB	Power Line Color	Power Line Connection	Power Voltage	Drive Transistor Control Line Color	D.T. Control Line Connect	Coil GA-Turn or Bulb Type
#33	AUX 1: TICKET ADVANCE (ENABLE)	Q1	▲ Aux. Driver ▼	RED	J16-P4-8	5VDC 1K RES. PULL-UP	WHITE	J2-P3	Ticket Dispenser
#34	AUX 2: TICKET METER	Q2		RED	J16-P4-8		BROWN	J2-P4	Ticket Meter
#35	AUX 3: SWITCHED GROUND	Q3		GRY-RED	J16-P3	12VDC	BLK-WHT	J2-P7	Ticket Dispenser

1.14 COIL LOCATIONS

Coil Menu: Single Coild & Cycling Coil

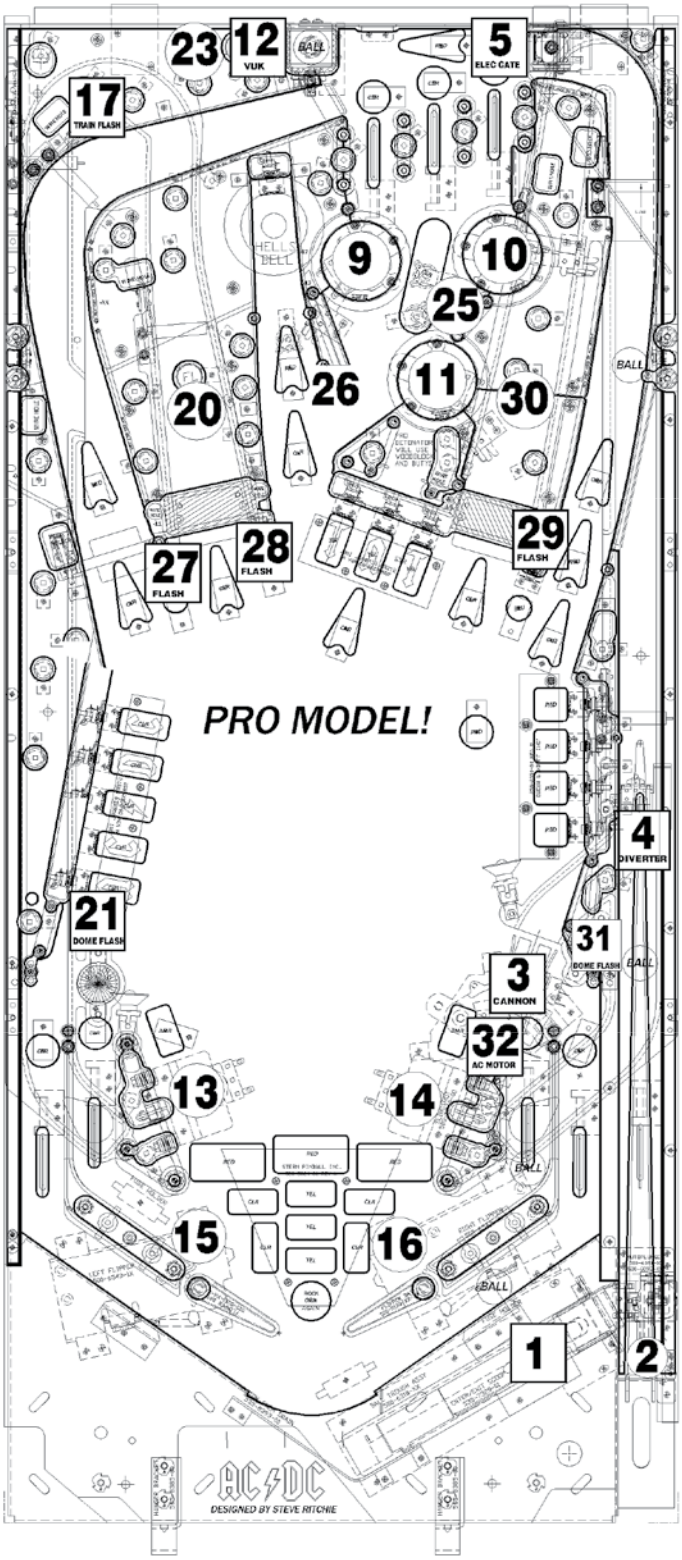

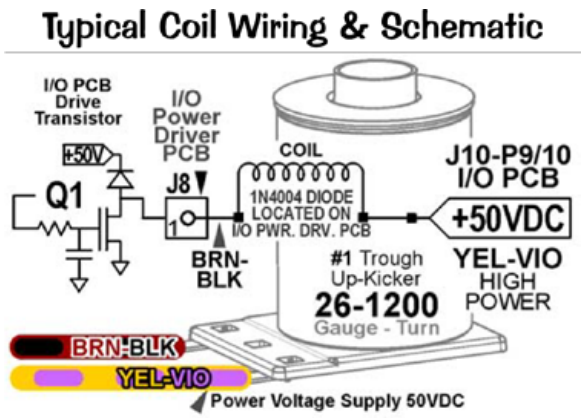

8 = Optional Shaker Motor
24 = Optional Coin Meter

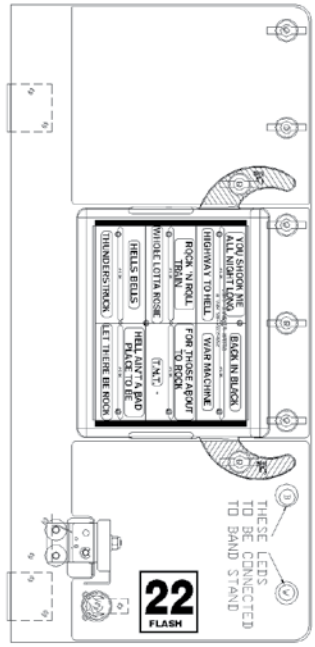

2. SERVICE MENU SYSTEM

2.1 SERVICE MENU INTRODUCTION

Important: The switch bracket holds the playfield power interlock. It is located just inside the coin door frame. The button switch for the playfield power interlock switch must be pulled out for electro-mechanical device testing or diagnostic purposes (this is required). If this button is pushed in, the playfield power is disabled while the coin door is open.

HOW TO USE THIS SECTION

This section will cover all functions available in the service menu in a step-by-step process. This section is divided into chapters which coincide with the main menu (will also provide more detailed information). The previous and following pages in this chapter will instruct the operator on how to move through the menus. It's simple, easy, and fun to use!

After powering up, push down the black "select" button to begin. Looking at the display you will momentarily see "SERVICE MENU" followed by the main menu.

Use the red [</-] and [+/>] buttons to move the selected icon left or right, and the black "select" button to activate the selected icon.

The main menu now appears with the "DIAG" icon (go to diagnostics menu) highlighted.

As the operator views the menu screen(s), the "More" [</>] symbols indicates that there are more icons to select in each direction. The icon selected will blink. Pushing the black "select" button will select the icon and the menu screen will change to the menu selected. Press the green "back" button to move backwards through the menu levels. Press the green "back" button repeatedly or select the "QUIT" icon to completely exit out of the service menu mode.

View the service menu icon tree on the next pages for a complete overview of all menus used in this system. The "HELP" icon provides an explanation of the icon usage or any other information in the menu where the "HELP" icon was selected (when available).

DIAG: Go to diagnostics menu | AUD: GO to audits menu | ADJ: Go to adjustments menu | UTIL: Go to utilities menu (Installs, Custom MSG. Custom Pricing, Set Time, Reset, & USB) | TOUR: Go to tournament menu (Start Tournament, View Tournament Data, Sign Messages)

Use both the manual and the display to help customize, troubleshoot, and/or diagnose faults, if any.

2.2 SERVICE MENU ICON TREE

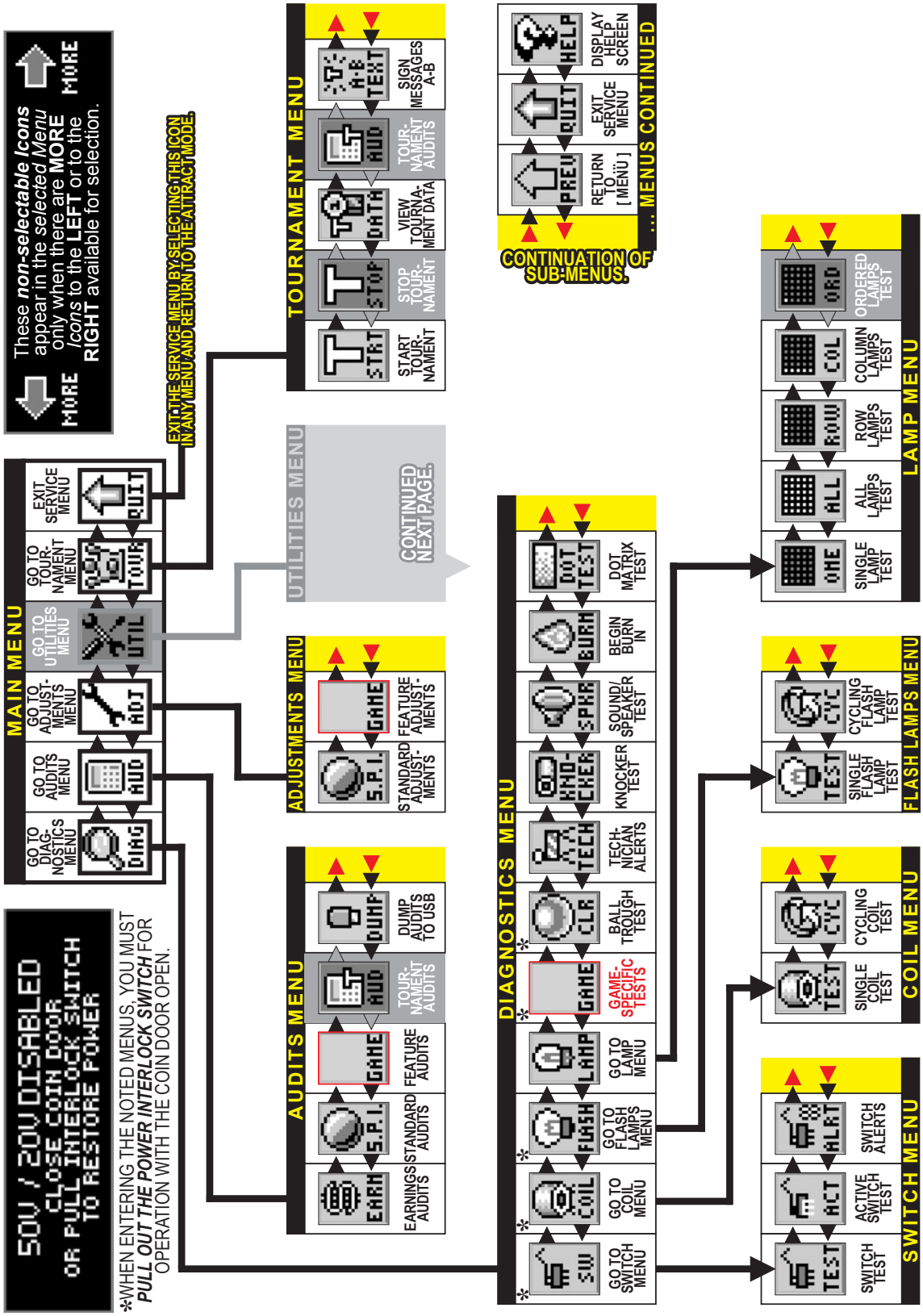

SERVICE MENU ICON TREE CONTINUED

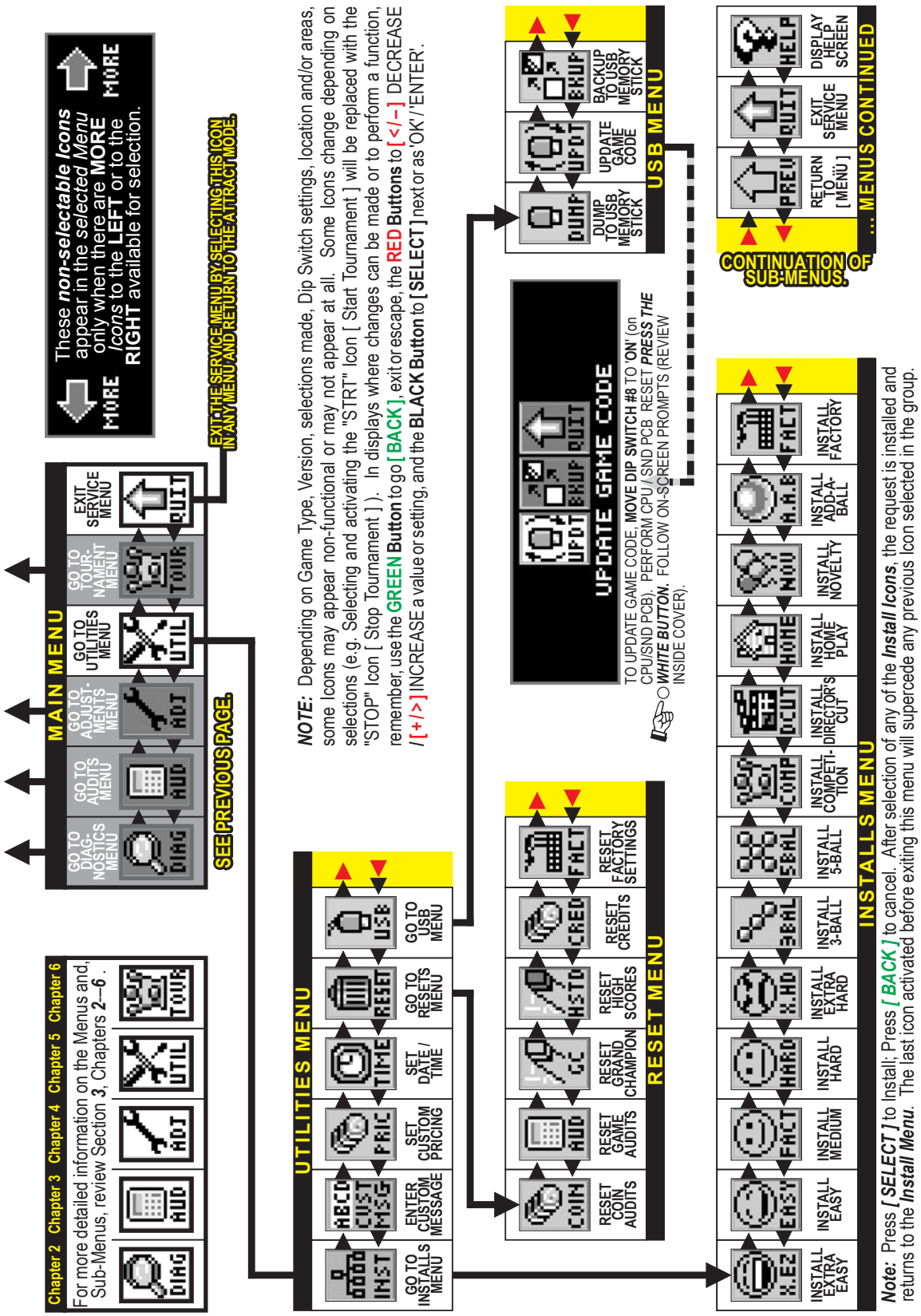

Note: Press *[SELECT]* to Install; Press *[BACK]* to cancel. After selection of any of the ***Install Icons***, the request is installed and returns to the ***Install Menu***. The last icon activated before exiting this menu will supercede any previous Icon selected in the group.

2.3 PROBLEM/SOLUTION TABLE

In the main menu and in all sub-menus (where the “QUIT” icon is present), if the “QUIT” icon is selected and activated, or the green “BACK” button is pressed repeatedly (depending on which sub-menu you are in), the service menu session will be exited and returned to the attract mode.

Turning the game on/off will start the power-up routine. Upon power-up, the display will indicate the country, file version, and language(s) installed. Language/Country change via DIP switch.

Problem	Solution
Will not enter the service menu after depressing the black [SELECT] button.	• Check the service switches [Green, Red, Red, Black] for loose connections or bad ground. • Check the associated wiring harness to/from the CPU/sound board, connector J13. • Check the CPU/sound board for possible failure
All the service buttons appear to be nonfunctional.	• Check the service switches wiring harness for poor or no connection and/or broken wires.
The green button in the attract mode will not enter the service credits menu to add service credits.	• Check to make sure the game is not in Free Play. If the game is set to Free Play, adding service credits is not required. • Check the service switches wiring harness for poor or no connection and/or broken wires.
The display “blanks out”.	• Check the dot matrix display for loose wiring harnesses, for poor or no connection, and/or broken wires. • Check F1 (3/4A fuse) on the display power supply board.
Icons scroll along continuously in the main menu.	• Check for stuck switches on either of the red buttons.
The start and flipper buttons do not select or activate icons in the switch test menu.	• This is normal. These switches are deactivated as they are part of the switch test.
Can’t move slection of the icons with the left and/or right flipper buttons.	• Check the flipper buttons for loose connections or bad grounding. • This is normal only in diagnostics switch & active switch tests
Some icons appear to be non-funtional in the menu or missing.	• Some functionality of the service menu may not have been completed during development. If absent, it should only be a non-critical function such as the “HELP” icon, which will explain the usage of icons. When completed, a software update will correct the problem. Software updates are announced via Service Bulletins and on our website (http://www.sternpinball.com/service-bulletins)
In the coil test menu, the coils and flashlamps do not fire after pressing the black “SELECT” button.	• Ensure the power interlock switch is pulled out.
In the service menu, the volume cannot be adjusted with either of the red buttons.	• The volume adjustment can only be made when in the attract mode.
In the service menu, the display seems to lock up or the help display appears to be non-functional	• If you cannot clear the situation by exiting back one menu, exit completely out of the service menu and re-enter. If the problem persists, call technical support for additional help.

2.4 DIAGNOSTICS MENU

To initiate, from the main menu select the “DIAG” icon. The diagnostics menu provides the tests for switches, coils, flash lamps, lamps, sounds, and dots in the dot matrix display. Each feature may be tested manually or automatically after entering the service menu. The [CYCLING COIL TEST]/[FLASH LAMP TEST] may be used for a quick verification of automatic test functions. The [SWITCH TEST] / [SINGLE COIL TEST] / [SINGLE LAMP TEST] / [ALL LAMP TEST] / [ROW LAMPS TEST] / [COLUMN LAMPS TEST] / [FLASH LAMP TEST] may be used for troubleshooting.

All diagnostics menu icons and their usages are explained throughout this chapter in the same order as seen in the dot matrix display. Note: Depending on the game type, version, selections made, DIP switch settings, location and/or areas, some icons may appear non-functional or may not appear at all. Some icons change depending on selection (e.g. Selecting and activating the “STRT” icon [Start Tournament] will be replaced with the “STOP” icon [Stop Tournament]). Icons and/or functions, order, and operation are subject to change.

Important: Upon power-up (game CPU reset) or opening the coin door, watch the display for any alerts.

This audible/visual alert display is shown when the 50v/20v power is disabled (by opening the coin door). Pull out the interlock switch only while in the service menu for coil or switch testing & burn-in when the coin door is required to stay open for service button use. Pulling out the power interlock switch or pressing the ‘escape’ green [BACK] button will remove the alert display. Initial display presentation is accompanied by 3 audible tones (the bright display warning will go dim after approximately 30 seconds).

This alert display is shown momentarily during game mode or power-up to alert the operator of a device malfunction (device or mechanism doesn’t energize or is energized repeatedly). Operator Alert works by monitoring any switch activated device that has the potential to trap a ball when disabled (e.g. in the shooter lane, scoop, or eject holes, etc.). This alert can also appear if a switch associated with a device (e.g. ball trough, auto plunger, etc.) is stuck closed (caused by a switch jam or stuck ball); the game will activate the device a predetermined number of times and if the problem is still detected, this device will be noted in Switch Alerts and/or Technical Alerts.

Upon entering the service menu, if an asterisk “ * ” is displayed after the words “SERVICE MENU”, the game had detected possible faulty devices, switches, and/or missing pinballs. Press either of the red buttons (short-cut to the technician alerts menu) or continue into the service menu (press the black button again), select the “DIAG” icon and “TECH” icon for the technician alerts information.

CAUTION! Remove all pinballs from the ball trough prior to lifting the playfield to its full upright position for servicing. Pull out the power interlock switch for operation. To eject pinballs, select the “DIAG” icon from the main menu to enter the diagnostics menu. Select the “CLR” icon to enter the ball trough test menu. Press the black [SELECT] buttons. To return to the diagnostics menu, press the green [BACK] button. This feature is also useful to retrieve a pinball for game testing in switch or coil tests.

SWITCH MENU

To initiate, from the diagnostics menu, select the “SW” icon. Switches are configured in a 4 x 16 matrix of rows [Switch Drives] and columns [Switch Returns] with up to 64 possible switches. Dedicated switches are configured in a 2 x 16 matrix of rows [Dedicated Switch Drives/Ground] and columns [Dedicated Switch Returns] with up to 32 possible dedicated switches (includes the 8 DIP switch positions). The switch test menu consists of three (3) parts: Switch & Active Switch Tests and Switch Alerts to test all switches.

Reminder: The flipper & start buttons (part of switch tests) are temporarily disabled as service navigation buttons during these test(s) so they can be tested and shown on-screen. Pressing the green [BACK] button (dedicated switch D-21), light green-black / black (GND), will exit the switch test or active switch test.

SWITCH TEST

To initiate, from the switch menu, select the “TEST” icon. Ensure the power interlock switch is pulled out if testing with the coin door open and the activation of coils is required. Upon entering switch test, you will notice that some switches are already indicated as closed. In the examples, the 4-ball trough switches #18, #19, #20, & #21 are shown closed (pinballs at rest in the ball trough), along with the flipper E.O.S. dedicated switches D-10 & D-12 (End-of-Stroke switches are ‘normally closed’). If the game has more flippers with E.O.S. dedicated siwtches, CPU DIP switch setting other than 1-8 OFF or switches stuck closed, more dots will be indicated (enter active switch test to reveal the names).

In Switch Test, close each switch and observe the display (switch closure is accompanied by a short audible tone). In the example, the black [SELECT] button dedicated switch D-24 is pressed. The dot matrix display will light up (highlight) the corresponding dot in the on-screen matrix, display the switch name, switch number, and the switch drive/return wire colors. When not closing a switch, the display indicates NONE and the last switch number closure. For the switch matrix grid and dedicated switch grid, escape out of this test and enter Active Switch Test (described below) to view the names of the switches closed. Note: Pressing the green [BACK] button (Ded. Switch D-21), Lt. green-black / black (GND), will exit the switch test.

CAUTION! Coil mechanism when activated has fast moving parts! While performing Switch Test with the coin door closed or open (with the power interlock switch pulled out), do not use your finger to test switches which are associtaed with a coil mechanism such as a vertical up-kicker (hole with a switch), slingshots, bumpers, etc.

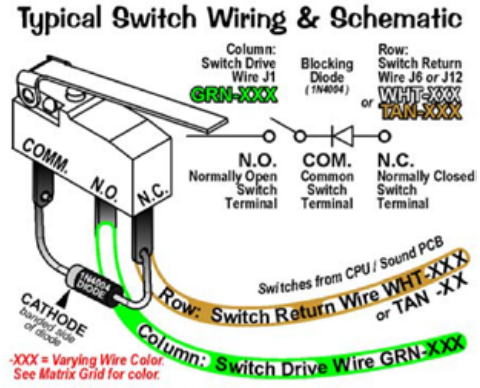

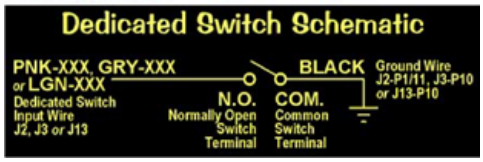

ACTIVE SWITCH TEST

To initiate, from the switch menu select the “ACT” icon. In Active Switch Test, if any switches are stuck closed (or normally closed from the pressence of pinball(s) as in the ball trough), the display will flash the corresponding dot(s) in the on-screen matrix, display the name, and display the switch drive/return wire colors. If more than one switch is closed, the switch information will change with each switch. This cycle continues until all switches are cleared or until Active Switch Test is exited. In the example, the black [SELECT] button dedicated switch D-24 is pressed and held down. The display will cycle and flash each dot, naming each switch which is closed. To determine the switch number, compare the highlighted dot to the same position in the switch matrix grid.

SWITCH ALERTS

To initiate, from the switch menu, select the “ALRT” icon. In Switch Alerts Menu, possible inoperable switches are marked with an “X” (Out of Service). Mark switches “IN” or “OUT OF SERVICE” by pressing the black button while the intended switch is highlighted and change with either of the red buttons. Switches which are determined as “OUT OF SERVICE” by the game or manually, will be automatically marked as “IN SERVICE” as soon as the game determines a valid switch closure (after adjusting, fixing or replacing the switch, then testing/actuating the switch). Note: A factory reset will also put the switch back “IN SERVICE” in which the game will need to redetermine if the switch should be marked “OUT OF SERVICE”.

COIL MENU

To initiate, from the diagnostics menu select the “COIL” icon. Coils #01 - #16 are typically high current coils (although low current coils may be used in these positions & will be noted). Coils #17 - #32 are typically low current coils. Flash lamps are typically used in positions #25 - #32 (although flash lamps may be used in any position and will be noted). Auxilliary coils may be used in positions #33 - #35.

Remember, use the green button to go [BACK], exit, or escape, the red buttons to [</-] GO BACK [+/>] GO FORWARD, and the black button to [SELECT] ENERGIZE the coil (solenoid) or flash lamp.

SINGLE COIL TEST

To initiate, from the coil menu select the “TEST” icon. Ensure the power interlock switch is pulled out if testing with the coin door open. Upon entering single coil test, you will notice the #1 coil is shown. The dot matrix display will indicate the coil or flash lamp name, coil (solenoid), or flash lamp number and the coil or flash lamp power line / drive transistor control line wire colors. To determine the “pin-outs” from the I/O power driver board, the coil voltage gauge-turns or lamp type, view the coil detailed chart table.

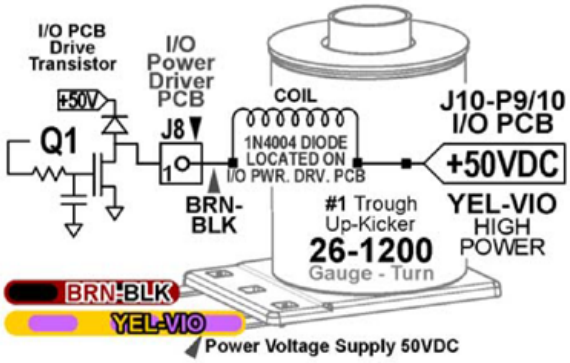

CYCLING COIL TEST

To initiate, from the coil menu select the “CYC” icon. Ensure the power interlock switch is pulled out if testing with the coin door open. The test pulses each regular coil or flash lamp sequentially (cycling) on the playfield and in the backbox (if coils or flash lamps are used). The dot matrix display indicates the same information you will find in Single Coil Test.

FLASH LAMPS MENU

To initiate, from the diagnostics menu select the “FLASH” icon. The two tests allows the technician to easily spot any burned-out flash lamps and replace them. Unlike Single Coil Test, which tests all coils (solenoids) including flash lamps, Single and Cycling Flash Lamp Tests test only the flash lamps used in the game. Flash lamps are typically used in positions #25 - #32 (although flash lamps may be used in any position and will be noted).

Remember, use the green button to go [BACK], exit, or escape, the red buttons to [</-] GO BACK [+/>] GO FORWARD, and the black button to [SELECT] ENERGIZE the flash lamp.

SINGLE FLASH LAMP TEST

To initiate, from the flash lamps menu select the “TEST” icon. Ensure the power interlock switch is pulled out if testing with the coin door open. Upon entering Single Flash Lamp Test you will notice the first flash lamp is shown. The dot matrix display will indicate the flash lamp name, flash lamp number, and the flash lamp power line / drive transistor control line wire colors. To determine the “pin-outs” from the I/O Power Driver Board or lamp type, view the coil detailed chart table.

CYCLING FLASH LAMP TEST

To initiate, from the flash lamps menu, select the “CYC” icon. Ensure the power interlock switch is pulled out if testing with the coin door open. The test pulses each flash lamp sequentially (cycling) on the playfield and in the backbox (if flash lamps are used). The dot matrix display indicates the same information you will find in Single Flash Lamp Test.

LAMP MENU

To initiate, from the diagnostics menu select the “LAMP” icon. Controlled lamps are configured in an 8 x 10 matrix of rows [Lamp Returns / Ground] and columns [Lamp Drives / 18VDC] with up to 80 lamps possible. The lamp test menu consists of five (5) parts: Single Lamp Test, Test All Lamps, Row Lamp Test, Column Lamps Test, and Ordered Lamps Test to test all lamps.

Remember, use the green button to go [BACK], exit, or escape, the red buttons to [</-] GO BACK/LEFT [+/>] GO FORWARD/ RIGHT, and the black button to [SELECT] next or as “OK / ENTER”.

SINGLE LAMP TEST

To initiate, from the lamp menu select the “ONE” icon. As each lamp is selected, the lamp will light at its location on the playfield as well as the dot matrix display. Upon entering Single Lamp Test, you will notice the #1 lamp is shown. The dot matrix display will light up (highlight) the corresponding dot in the on-screen matrix, display the lamp name, lamp number and the lamp return/drive wire colors.

ALL LAMPS TEST

To initiate, from the lamp menu select the “ALL” icon. Upon entering All Lamps Test, you will notice the dot matrix display is flashing “ALL LAMPS ON” and the lamps on the playfield will be lit, alternating between rows in the lamp matrix grid. The dot matrix display will light up (highlight) all of the dots in the on-screen matrix.

ROW LAMPS TEST

To initiate, from the lamp menu select the “ROW” icon. As each lamp row is selected, the lamps in the row will light on the playfield as well as the dot matrix display. Upon entering Row Lamps Test, you will notice that the #1 lamp row is shown. The dot matrix display will light up (highlight) the corresponding row of dots in the on-screen matrix, display the lamp row number, the lamp return wire colors, the I/O PCB connector, and transistor number.

COLUMN LAMPS TEST

To initiate, from the lamp menu select the “COL” icon. As each lamp column is selected, the lamps in the column will light on the playfield as well as the dot matrix display. Upon entering Column Lamps Test, you will notice that the #1 lamp column is shown. The dot matrix display will light up (highlight) the corresponding row of dots in the on-screen matrix, display the lamp column number, the lamp drive (18VDC) wire colors, the I/O PCB connector, and IC number.

ORDERED LAMPS TEST

To initiate, from the lamp menu select the “ORD” icon. If required, this icon will appear in the lamp menu. Identical to Single Lamp Test, however, the lamps lit are not in the lamp matrix numeric order, but ordered and arranged in seperate localized grouping(s) for easier lamp checking.

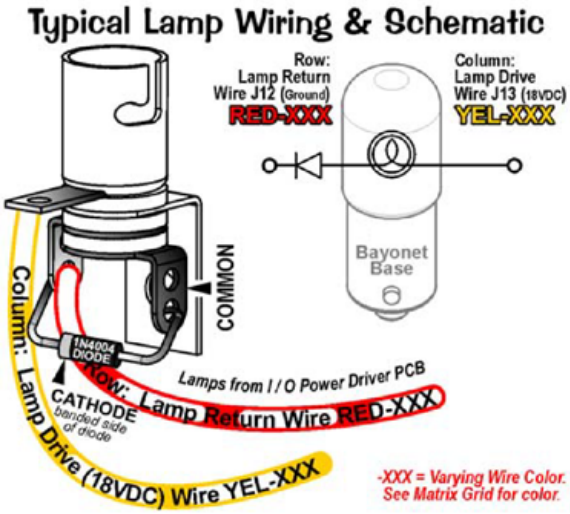

GAME SPECIFIC TESTS

To initiate, from the diagnostics menu select the “GAME” icon. Ensure the power interlock switch is pulled out when testing with the coin door open. The menu is provided to allow the technician a simple method of testing game specific coils and/or switches, if required.

BALL TROUGH TEST

To initiate, from the diagnostics menu select the “CLR” icon. Ensure the power interlock switch is pulled out if testing with the coin door open. The menu is provided to allow the technician a simple method of removing the balls from the trough and also to test functionality of the trough, ensuring proper trough operation. Upon entering Ball Trough Test, you will notice that four switches are already indicated as closed. In the example, the 4-ball trough switches #18, #19, #20, & #21 are shown closed (pinballs at rest in the ball trough). To return to the diagnostics menu, press the green [BACK] button.

Press the black [SELECT] button to eject the ball in the first position Switch #21 (VUK OPTO Trough #1 (R)). Simultaneously, the dot matrix display and the playfield will eject the ball to the trough up-kicker, eject from the trough up-kicker into the shooter lane momentarily closing switch #23 (shooter lane), and is ejected onto the playfield where the technician can easily retrieve the pinball or allow the ball(s) to to re-enter the trough to continue Ball Trough Test. The dot matrix display indicates switch #18 (4-ball trough #4 (L)) as open as the remaining three (3) pinballs shift over one (1) position to the right. If the technician allows the rejected pinball to re-enter the ball trough, the dot martix display will indicate switch #18 as closed. Reminder: Switch #22 is the stacking OPTO switch ; if more than five (5) pinballs are used the additional switches will be noted. In this game four (4) pinballs are used and required for proper operation.

CAUTION! Continuous use of the above test may overheat the trough up-kicker coil.

TECHNICIAN ALERTS

To initiate, from the diagnostics menu select the “TECH” icon. This menu is provided to show any switch problems and/or missing pinballs. If this icon is not blinking, there are no technician alerts. If upon entering the service menu the display indicated an asterisk [*] and “USE -/+ TO VIEW TECH. ALERTS”, alerts are present (the above “TECH” icon will also blink).

After selecting this icon, the display will indicate the alert(s). If there are 2 alerts present, the display will indicate (1/2) with the 1st alert on display. Press the red [+/>] button to view the second alert (2/2). The second number in the parenthesis after the slash indicates how many alerts total are present. To return to the diagnostics menu, press the green [BACK] button.

Note on Switch Detection: During gameplay, activation of switches are continuously monitored. For a switch to be determined as inoperable, or “OUT OF SERVICE”, up to twenty games or so must be played for a switch to be automatically marked as “OUT OF SERVICE”. In programming, if a switch is determined to be faulty, gameplay is compensated. Switches noted as “OUT OF SERVICE” are determined to be stuck closed or open depending on switch usage. Free up the switch actuator, adjust, or replace if necessary. Performing a valid switch closure will put the switch back “IN SERVICE”.

Determination of switch usage can be checked in Audits. Find the associated audit with the switch in question and check usage; compare the numbers to commonly used switches. After any switch is checked and repaired or replaced, it’s suggested to test the switch in the Switch Test or Single Coil Test where the associated coil to the switch can be tested as well. After correcting the problem, the switch will be marked “IN SERVICE” and the switch is again monitored as specified above. Only you can determine if a switch marked “OUT OF SERVICE” is actually inoperable or if it is just not getting actuated during gameplay.

Note on Pinball Detection: While in the technician alerts menu, if the following is displayed, the game has detected one (1) or more pinball(s) missing and has compensated for the last pinball(s) to provide normal gameplay.

During gameplay a pinball can get trapped or stuck. If after approximately 15 seconds of inactivity or “no scoring”, Ball Search is started. Note: If the pinball is in the plunger lane or “held” on the flipper, no ball search will be performed. The game will perform one ball search in an attempt to “find” or free-up the pinball.

If the games does not see a switch closure (indicating the pinball has not been found), the dot matrix display may indicate [LOCATING PINBALLS PLEASE WAIT...], during which Ball Search will continue until the timer runs out (this feature will not happen if the game is in Competition Mode. Ball Search will continue until the pinball is found, unstuck and/or replaced manually). The display will momentarily acknowledge the missing pinball(s). The game will provide another pinball into play and will compensate for the lost pinball. Gameplay will appear normal.

Note: This detection and compensation will happen with every pinball if each suffers the same fate of a ball trap. If all balls get trapped, the game cannot be played or started until the situation is rectified.

Important: Determine where the pinball is! Do not add pinball(s) until it is determined the pinball(s) are indeed missing and not just stuck. The most common places for a pinball to be stuck is in device holes (ejects and VUKs) or ball troughs. Determine that all devices are functioning properly. Check around plastic pieces and ramps to see if pinballs have gotten jammed or stuck.

When the found pinball or a replacement pinball is added to the ball trough, the technician alert will immediately clear and will then indicate any remaining alerts (if present) or “NO TECHNICIAN ALERTS”.

Enter the Ball Trough Test to cycle the pinballs and to check proper switch and coil operation. If a pinball was added, and the originally stuck pinball has freed itself at a later time, the game will not operate correctly.

Note on Device Malfunction: While in the technician alerts menu, if the following is displayed, the game has detected a “device malfunction”. Check the device indicated (coil and/or switch).

KNOCKER TEST

To initiate, from the diagnostics menu select the “KNO-CKER” icon. The digitally remastered “knocker” is sounded. The knocker sound is used to alert the player if they have recieved a special replay or a credit from the Match Award feature. Press the black [SELECT] button to activate the knocker. To return to the diagnostics menu, press the green [BACK] button.

SOUND/SPEAKER TEST

To initiate, from the diagnostics menu select the “SPKR” icon. This system produces true digital stereo sound from backbox and cabinet speakers or “mono” on the cabinet speaker (when used by itself). This menu is provided to allow the technician a simple method of testing the speakers if rewired or replaced.

Upon entering the Sound/Speaker Test, you will notice the dot matrix display indicating the first option of available music and/or sound(s) in this test. Press the red [+/>] button to cycle through the available music and/or sounds and press the black [SELECT] button to play the option shown in the dot matrix display. Press the green [BACK] button to exit.

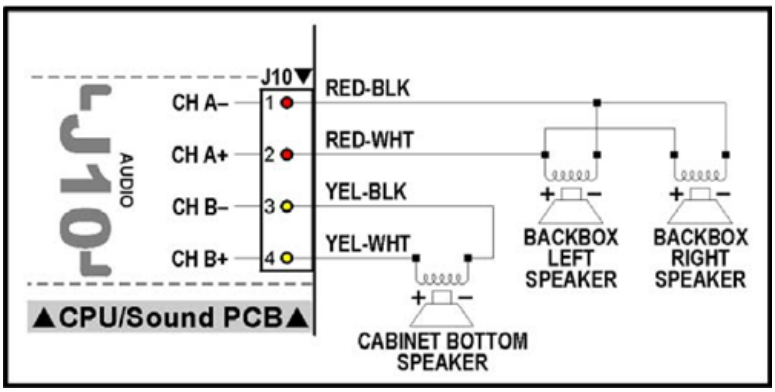

SPEAKER PHASE TESTING

Connections to each of the speakers are polarized and each must be connected appropriately for the best sound quality. If one speaker has the positive and negative connections reversed with respect to the other, bass frequencies will not be produced properly and the overall sound quality will be poor. To test for proper speaker phasing, use the Sound/Speaker Test to cycle though the available music and sound. If the sound is not balanced or doesn’t sound correct, check the speaker wiring.

1. Check each speaker for polarity markings. If the speakers have polarity markings, verify the backbox speaker RED-BLK wires and the cabinet speaker YEL-BLK wire(s) are connected to the negative (-) terminal.

2. Disconnect the speaker output connector J10 (AUDIO) from the CPU/sound PCB (in the backbox) and connect a 1.5v battery across each speaker pair one at a time while observing the speakers.

3. Make sure the positive (+) battery terminal is connected to the positive lead [J10, Pin-2, CH A+] (RED-WHT) or [J10, Pin-4, CH B+] (YEL-WHT) each time. As the connection is made, check speaker cone movement; proper connections are indicated by outward movement.

BEGIN BURN-IN

To initiate, from the diagnostics menu select the “BURN” icon. After selecting this icon, the burn-in test will start. Ensure the power interlock switch is pulled out if testing with the coin door open (required for coil function). Upon entering Burn-In Test, the game will exercise all CPU I/O functions: Dot Matrix Display Test, Coil Cycling Testing, All Lamps Test, and Sound/Speaker Test. Press the green [BACK] button to pause and to view cumulative burn-in minutes. Press the green [BACK] button again to return to the diagnostic menu.

DOT MATRIX TEST

To initiate, from the diagnostics menu select the “DOT TEST” icon. After selecting this icon the dot matrix test immediately begins. The dot matrix display will immediately and continuously illuminate and cycle each of the 5 tests for 1 pass each. To retrun to the diagnostics menu, press the green [BACK] button.

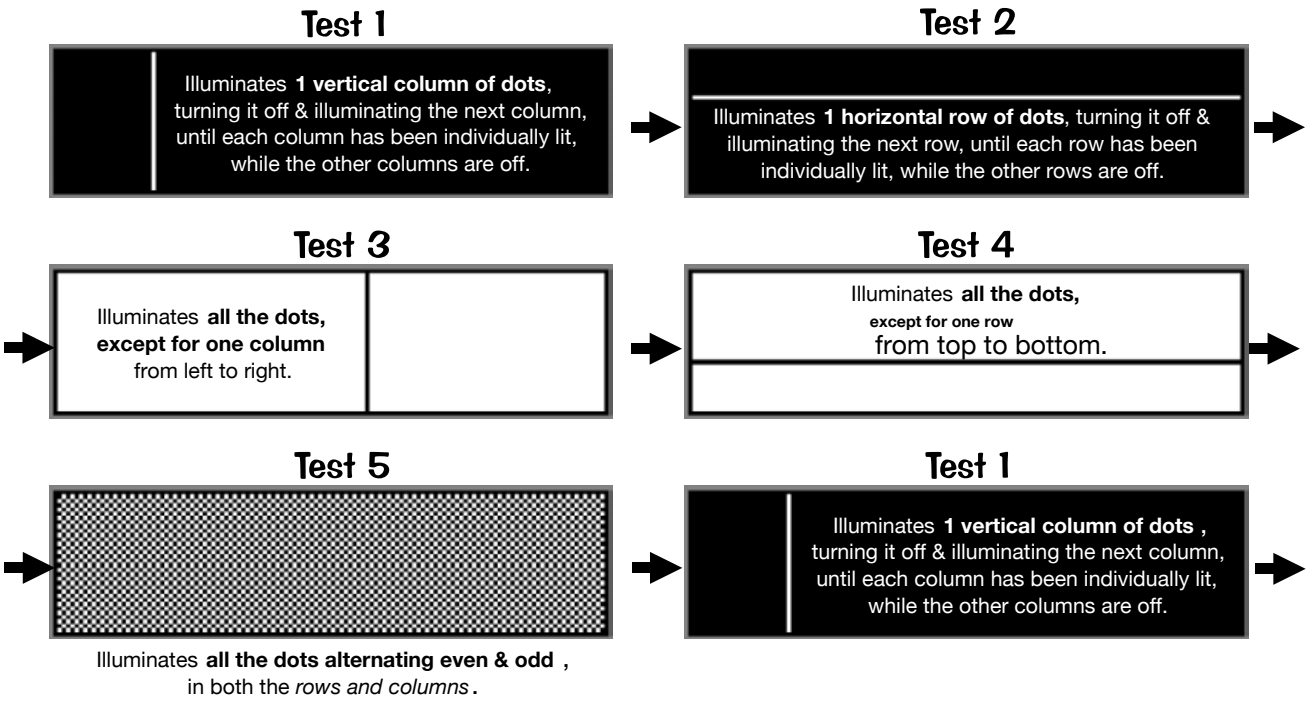

3. PARTS IDENTIFICATION & LOCATION

3.1 BACKBOX PARTS

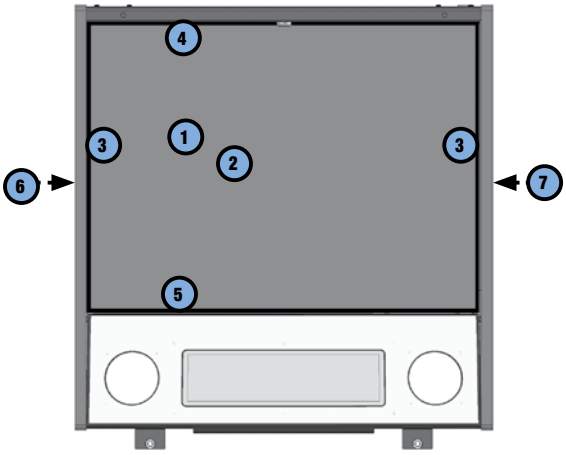

EXTERNAL

ID	Part Number	Description	Qty
1	830-52M5-00	Translite Art	1
2	660-5038-02	Backglass	1
3	545-5018-14	Plastic Extrusion 18-1/8"	2
4	545-5018-15	Glass Channel 26"	1
5	545-6313-01	Glass Life Channel 26"	1
6	820-66C0-01	Decal Backbox Left	1
7	820-66C0-02	Decal Backbox Right	1

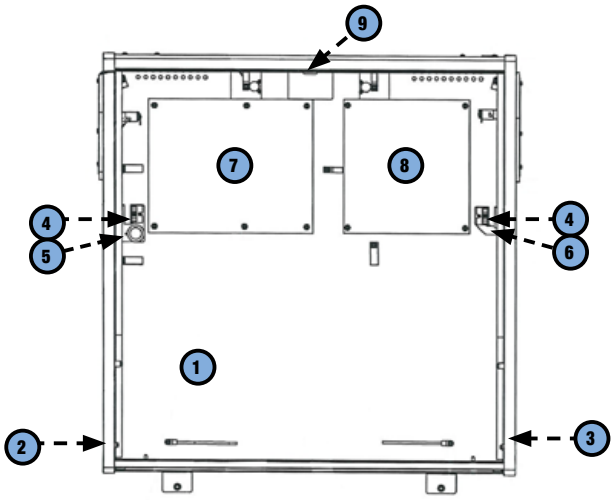

INTERNAL

ID	Part Number	Description	Qty
1	515-9695-01	Backbox, Black	1
2	525-5831-05-17	Side Panel - Left	1
3	525-5831-06-17	Side Panel - Right	1
4	077-5214-01	Fluorescent Bub Socket	2
5	535-7739-00	Fluorescent Lamp Mount Bracket - Left	1
6	535-7739-01	Fluorescent Lamp Mount Bracket - Right	1
7	520-5249-00	I/O Board	1
8	520-5337-01	CPU Board	1
9	355-5168-00	Backbox Lock, 5/8 in	1

3.2 SPEAKER PANEL PARTS

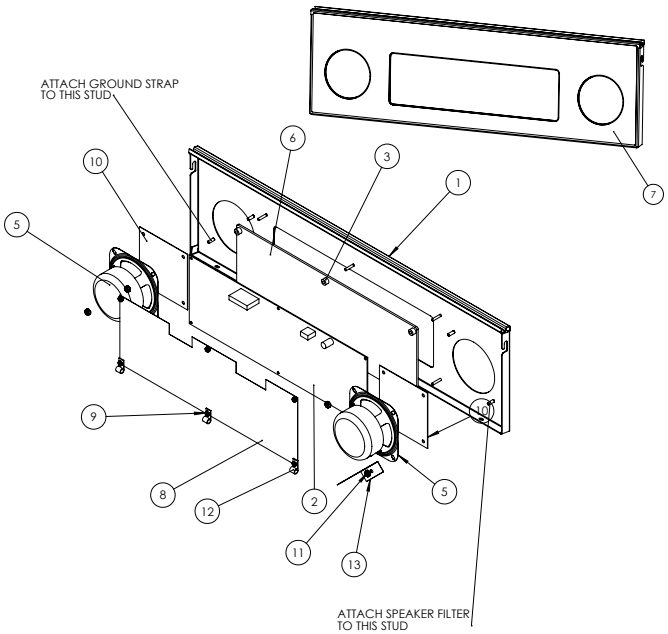

ID	Part Number	Description	Qty
1	515-9743-01	Speaker Panel	1
2	520-5052-15	LED Display	1
3	254-5000-09	Nylon Spacer - Black - 3/8 OD X .175 ID X 1/4"	6
4	600-5006-12	GND Cable - 12" Long (Not Shown)	1
5	031-5004-02	Speaker (Shld.) 4"	2
6	545-7849-00	Display Lens	1
7	820-8347-C0	Speaker Panel Decal -ACDC	1
8	240-5005-00	6-32 Nylon Stop Nut	6
9	535-8081-01	Speaker Grill	2
10	240-5104-00	8-32 Keps Nut	4
11	040-5000-03	1/4" Cable Clamp	3
12	545-7877-00	Fische Paper	1
13	036-5260-33	14 Pin Ribbon (Not Shown)	1
14	036-5452-02	2 Spkr in Series (Not Shown)	1
15	036-5520-00	LED Display 5v (Not Shown)	1

3.3 CABINET PARTS

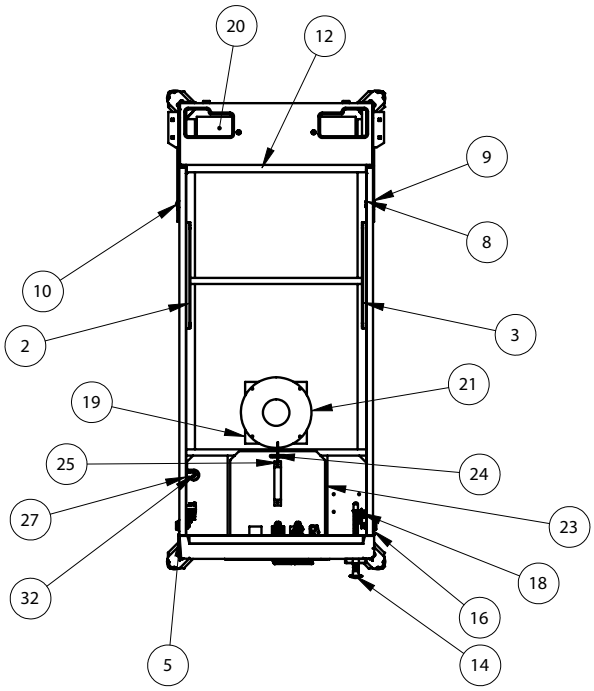

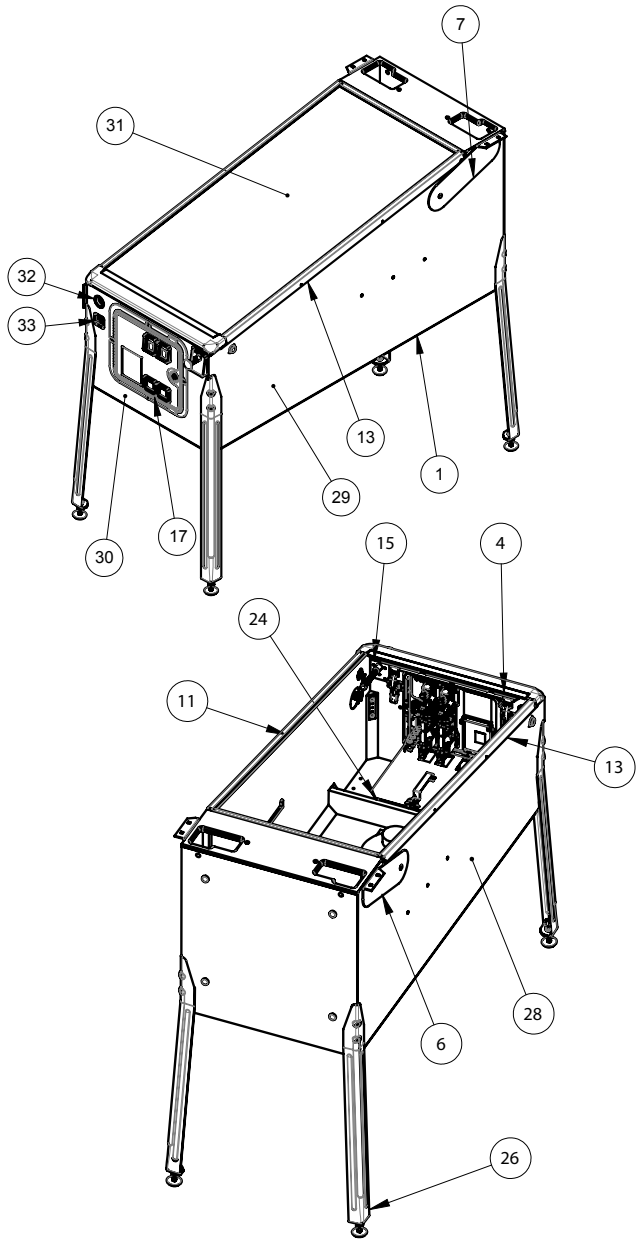

ID	Part Number	Description	Qty
1	525-5832-00	STANDARD CABINET	1
2	535-5989-00	SLIDE & PIVOT BRACKET - LEFT SIDE	1
3	535-5990-00	SLIDE & PIVOT BRACKET - RIGHT SIDE	1
4	500-7243-00	LOCK DOWN NU STYLE ASSEMBLY	1
5	500-7238-00	FRONT MOLDING ASSEMBLY	1
6	535-7999-00	PIVOT HINGE, LEFT	1
7	535-7999-01	PIVOT HINGE, RIGHT	1
8	254-5042-00	SPACER NUT, HEX, 1/2"OD, 1/4-20	2
9	242-5084-00	WASHER, 1/2" I.D., 3/16" THK	2
10	231-5072-00	1/4-20 X 1/2" CARRIAGE BOLT	2
11	545-5017-00	PLASTIC CHANNEL	2
12	545-9802-00	GLASS REAR EXTRUSION	1
13	535-7297-02	SIDE ARMOR	2
14	500-6146-00-07	BALL SHOOTER ASSEMBLY	1
15	535-5027-01	PLUNGER SUPPORT PLATE, NOTCHED	1
16	500-5026-36	FLIPPER BUTTON ASSY (YELLOW)	2
17	501-5018-172	COIN DOOR 2-CHUTE NO EMBOSS	1
18	180-5160-01	FLIPPER SWITCH, Single	2
19	545-5072-03	GRILL - SPEAKER / VENT	1
20	545-5072-02	GRILL - SPEAKER / VENT	2
21	031-5007-01	SPEAKER, CABINET 8" ROUND, 4 OHM	1
22	545-5090-00	CASH BOX - PLASTIC	1
23	535-5013-03	CASH BOX COVER	1
24	535-7562-00	CASH BOX LOCK BRACKET	1
25	535-7772-00	HAIR PIN CLIP	1
26	500-5921-50	LEG ASSEMBLY - BLACK	4
27	516-0007-00	TILT ASSEMBLY	1
28	820-66C0-03	DECAL, CABINET LEFT	1
29	820-66C0-04	DECAL, CABINET RIGHT	1
30	820-66C0-05	DECAL, CABINET FRONT	1
31	660-5001-00	PLAYFIELD GLASS	1
32	500-6388-44-LED	START BUTTON	1
33	500-6587-06-TL	TOURNAMENT BUTTON	1
	820-66C0-XX	Cabinet Decal Replacement Set, Speaker Panel Decal Not Included	

3.4 PLAYFIELD TOP - MAIN ASSEM. & SWITCHES

ID	Part Number	Description	Qty
1	545-5995-02	Arch (Black Metal)	1
2	755-51C5-12-Y	Instruction Card	1
3	755-5400-11-Y	Coin Card USA 10 Default	1
4	545-5409-01	Light Reflector	2
5	550-5031-06	Light Cover w/ tabs (Yellow)	1
6	550-5031-02	Light Cover w/ tabs (Red)	1
7	535-0026-00	Spinner Bracket	1
	515-7649-00	Spinner	1
8	510-5148-01	Left Ramp w/ Flap	1
9	510-5147-01	Right Ramp w/ Flap	1
10	535-5269-03	1-Way Gate Bracket	1
	535-5307-03	1-Way Gate Wire	1
11	511-5096-01	Electric Gate	1
12	545-6845-00	Jukebox Cover	1
13	515-6596-01	Diverter Assembly	1
14	500-9874-00	Bell Assembly	1
15	535-8385-00	Playfield Hangers	2

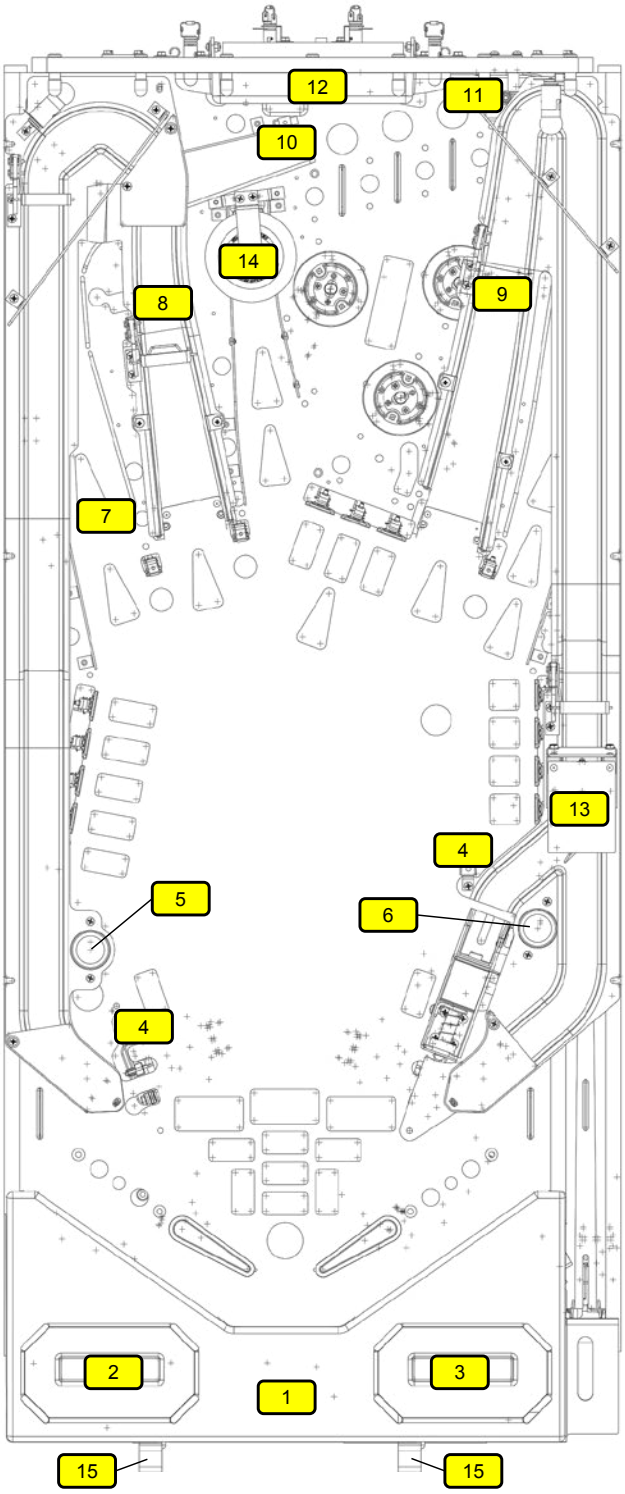

3.5 PLAYFIELD BOTTOM - MAIN ASSEM. AND SWITCHES

ID	Part Number	Description	Qty
1	500-5329-03	Pivot Pin Slide Bracket	2
2	535-5988-01	Edge Slide Bracket	2
3	535-8964-00	Back Panel Support Bracket	2

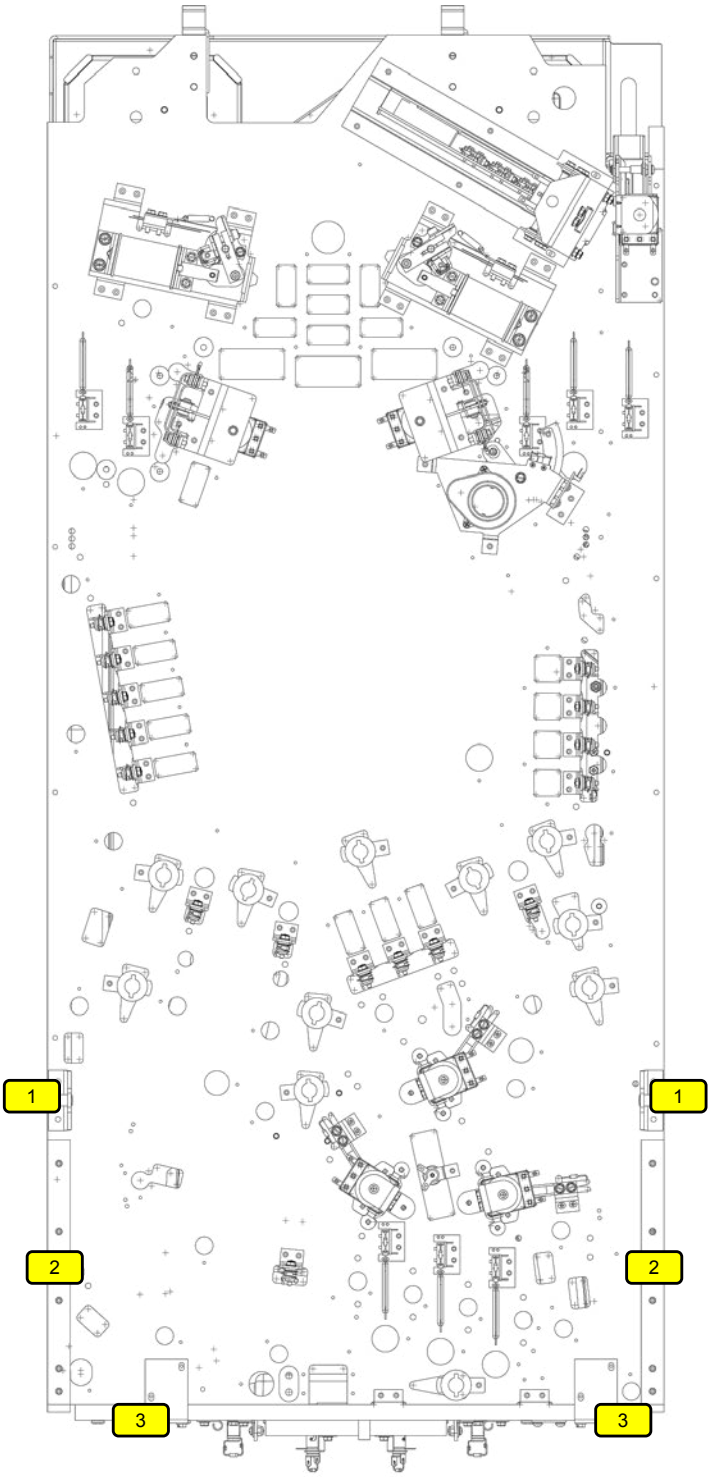

3.6 PLAYFIELD - RUBBER PARTS

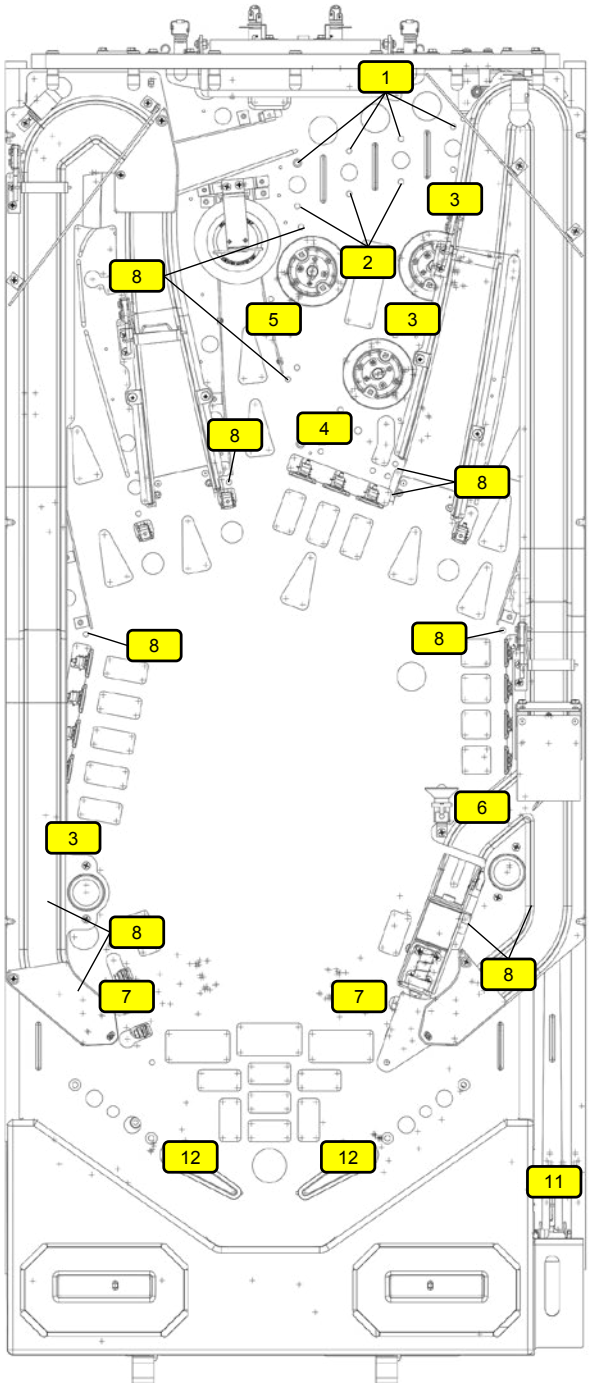

Figure 3.6.1. Rubber o-ring part locations

RUBBER O-RINGS

ID	Qty	Size (ID)	Size (OD)	Durometer	Color	Part Number
1	4	3/16"		50	Black	545-5348-01
2	3	5/16"		50	Black	545-5348-02
3	3	3/4"		50	Black	545-5348-04
4	1	1"		50	Black	545-5348-05
5	1	1-1/4"		50	Black	545-5348-06
6	1	1-1/2"		50	Black	545-5348-07
7	2	2-1/2"		50	Black	545-5348-09
8	11		7/16"	50	Black	545-5348-17

Figure 3.6.2. Rubber o-ring part numbers and usage. ID: Inner Diamter, OD: Outer Diameter, Durometer: Higher number is firmer, less bounce, and more durable.

ID	Qty	Description	Color	Part Number
11	1	Plunger Tip	Black	545-5276-00
12	2	Flipper Rubber	Red	545-5277-22
13	7	Bumper Pad (Sub assemblies)	Black	545-5105-00
14	2	Bumper Pad (Flippers)	Black	545-5428-00

Figure 3.6.3. Other rubber part numbers and usage

3.7 RUBBER SIZE CHART

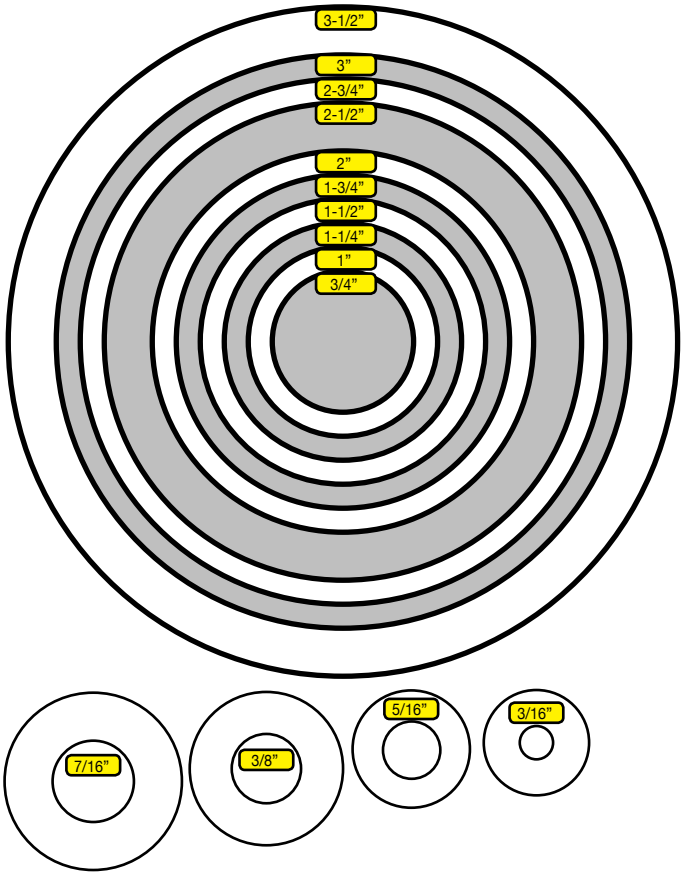

Figure 3.7.1. Rubber ring inner diameter sizing tool. Hold ring up to chart and read largest size on inside of ring. Dimensions are Inner Diameter (ID) unless otherwise noted as Outer Diamter (OD).

4. MAJOR ASSEMBLIES

4.1 BALL SHOOTER ASSEMBLY

500-6146-00-07

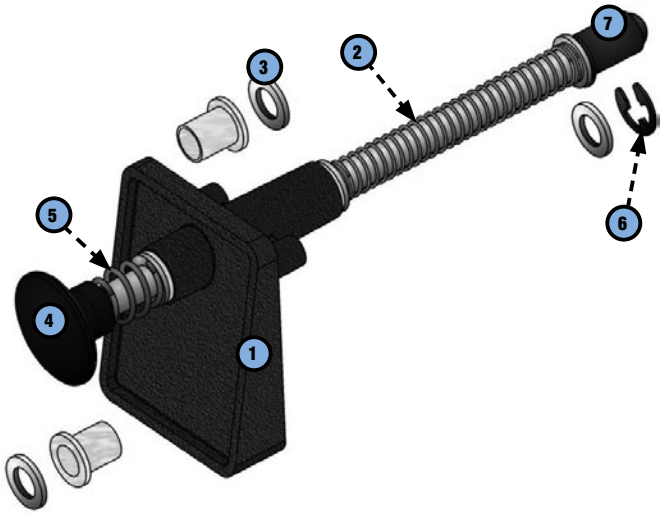

ID	Part Number	Description	Qty
1	535-5067-02	Housing Assembly	1
2	266-5001-07	Compressed Spring (Long) - Orange	1
3	242-5014-00	Washer 3/8 ID x 5/8 OD x 1/16	3
4	515-6557-00	Rod Assembly	1
5	266-5010-00	Compressed Spring (Short)	1
6	270-5012-00	Retaining Ring, 3/8"	1
7	545-5276-00	Rubber Tip	1

4.2 AUTO LAUNCH ASSEMBLY

500-9818-00

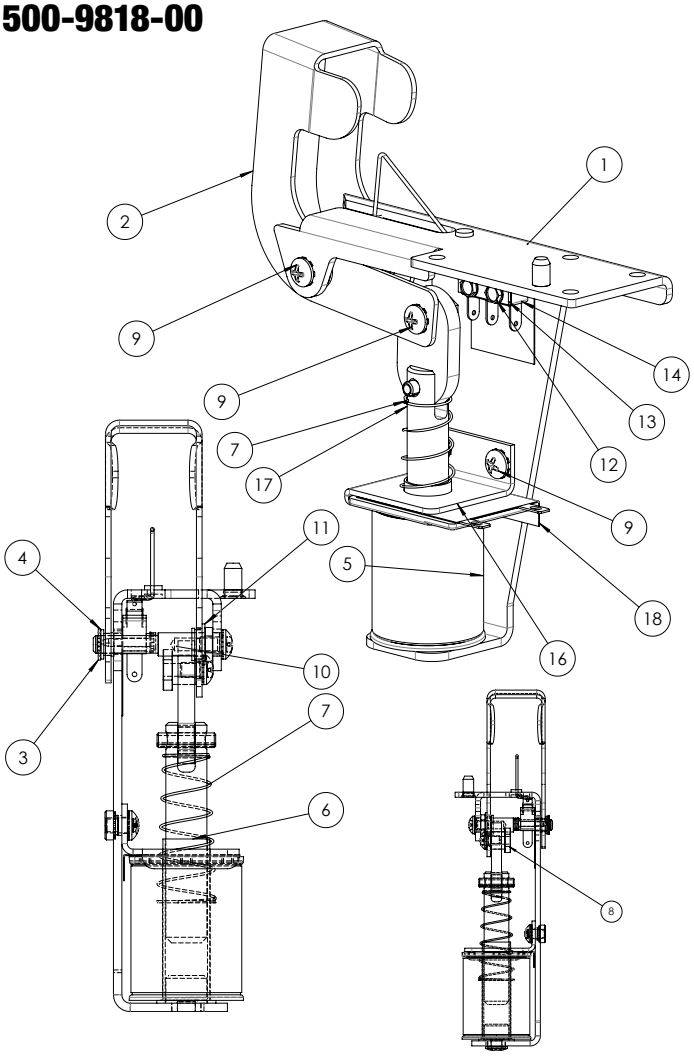

ID	Part Number	Description	QTY
1	515-9689-00	MAIN BRKT: AUTO-PLUNGER	1
2	535-0728-00	KICKER ARM, AUTO-PLUNGER	1
3	270-5001-00	RETAINING E-RING, 3/16" SHAFT OD	1
4	545-5352-00	NYLINER, 3/16" SHAFT	1
5	090-5001-ND	COIL - 23-800, NO DIODE	1
6	545-5411-00	COIL SLEEVE	1
7	266-5020-00	COMPRESSION SPRING-CONICAL	1
8	530-7834-00	PIN: KICKER ARM, AUTO-PLUNGER	1
9	232-5300-00	SCREW, 8-32 X 1/4" PPH SEMS	4
10	530-7835-00	PIVOT, AUTO-PLUNGER	1
11	545-5423-00	NYLINER, 1/4" SHAFT, 4L1-FF	1
12	237-5937-02	SCREW, 2-56 X 1/2" HWH MS	2
13	535-6539-00	SWITCH BODY PROTECT PLATE	1
14	180-5157-01	SHOOTER SWITCH - SHORT ARM	1
15	545-6268-00	FISCHE PAPER	1
16	535-0762-00	COIL BRACKET-AUTOPLUNGER	1
17	515-6304-03	PLUNGER / LINK ASSEMBLY	1
18	545-0762-00	FISCHE PAPER: AUTO-LAUNCHER	1

4.3 FLIPPER ASSEMBLY, LEFT

500-6543-12-ND

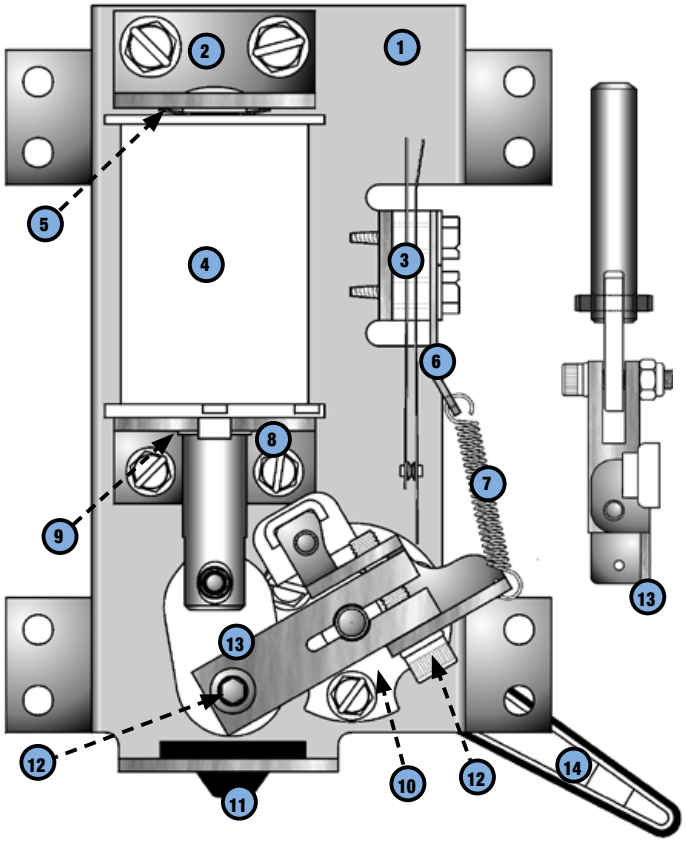

ID	Part Number	Description	Qty
1	515-6617-01	FLIPPER BASE PLATE LEFT KIT W/ BRACKET MOUNT HARDWARE	1
2	515-6308-01	COIL STOP BRACKET	1
3	180-5149-00	SWITCH - END OF STROKE N/C	1
4*	090-5032-ND	COIL	1
5	269-5002-00	SPRING WASHER	1
6	535-7354-00	SWITCH RETURN SPRING BRACKET	1
7	265-5035-00	SPRING FLIPPER RETURN	1
8	535-7356-00	COIL SUPPORT BRACKET	1
9	545-5388-00	COIL SLEEVE, FLIPPER	1
10	545-5070-00	FLIPPER BAT BUSHING	1
11	545-5428-00	FLIPPER BUMPER PAD	1
12	237-6144-00	SET SCREW #10-32 x 3/4" SOCKET	2
13	515-7203-01	PLUNGER/CRANK ASSEMBLY, LEFT	1
14	515-5133-08-06	FLIPPER BAT AND SHAFT*	1
	500-6307-10	FLIPPER REBUILD KIT, LEFT	
		* Refer to game rubber chart for flipper rubber color and part number.	

4.4 FLIPPER ASSEMBLY, RIGHT

500-6543-02-ND

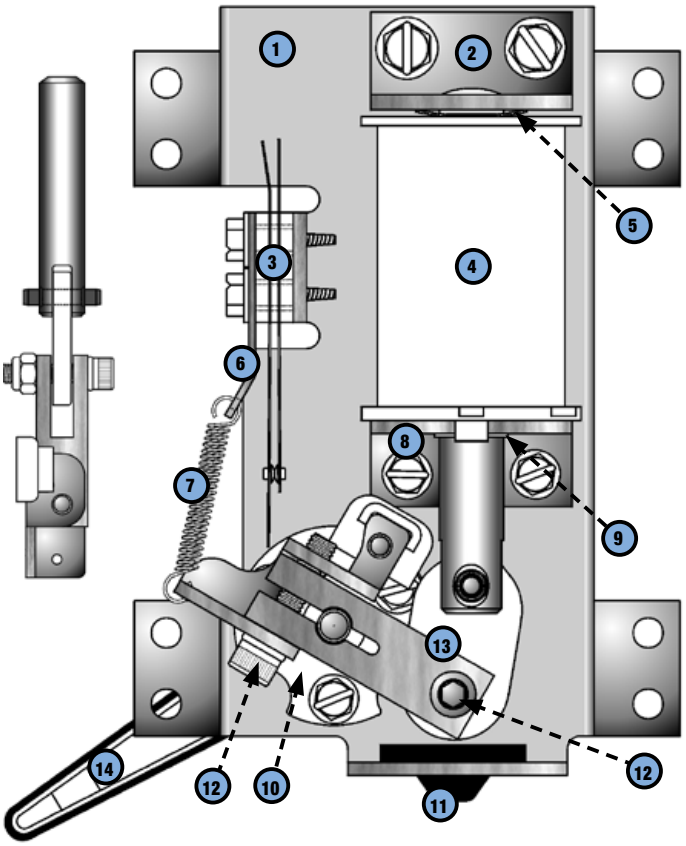

ID	Part Number	Description	Qty
1	515-6617-00	FLIPPER BASE PLATE RIGHT KIT W/ BRACKET MOUNTING HARDWARE	1
2	515-6308-01	COIL STOP BRACKET	1
3	180-5149-00	SWITCH - END OF STROKE N/C	1
4	090-5032-ND	COIL	1
5	269-5002-00	SPRING WASHER	1
6	535-7354-00	SWITCH RETURN SPRING BRACKET	1
7	265-5035-00	SPRING FLIPPER RETURN	1
8	535-7356-00	COIL SUPPORT BRACKET	1
9	545-5388-00	COIL SLEEVE, FLIPPER	1
10	545-5070-00	FLIPPER BAT BUSHING	1
11	545-5428-00	FLIPPER BUMPER PAD	1
12	237-6144-00	SET SCREW #10-32 x 3/4" SOCKET	2
13	515-7203-00	PLUNGER/CRANK ASSEMBLY	1
14	515-5133-08-06	FLIPPER BAT AND SHAFT*	1
	500-6307-00	FLIPPER REBUILD KIT, RIGHT	
		* Refer to game rubber chart for flipper rubber color and part number.	

4.5 POP BUMPER ASSEMBLY

516-6784-XX

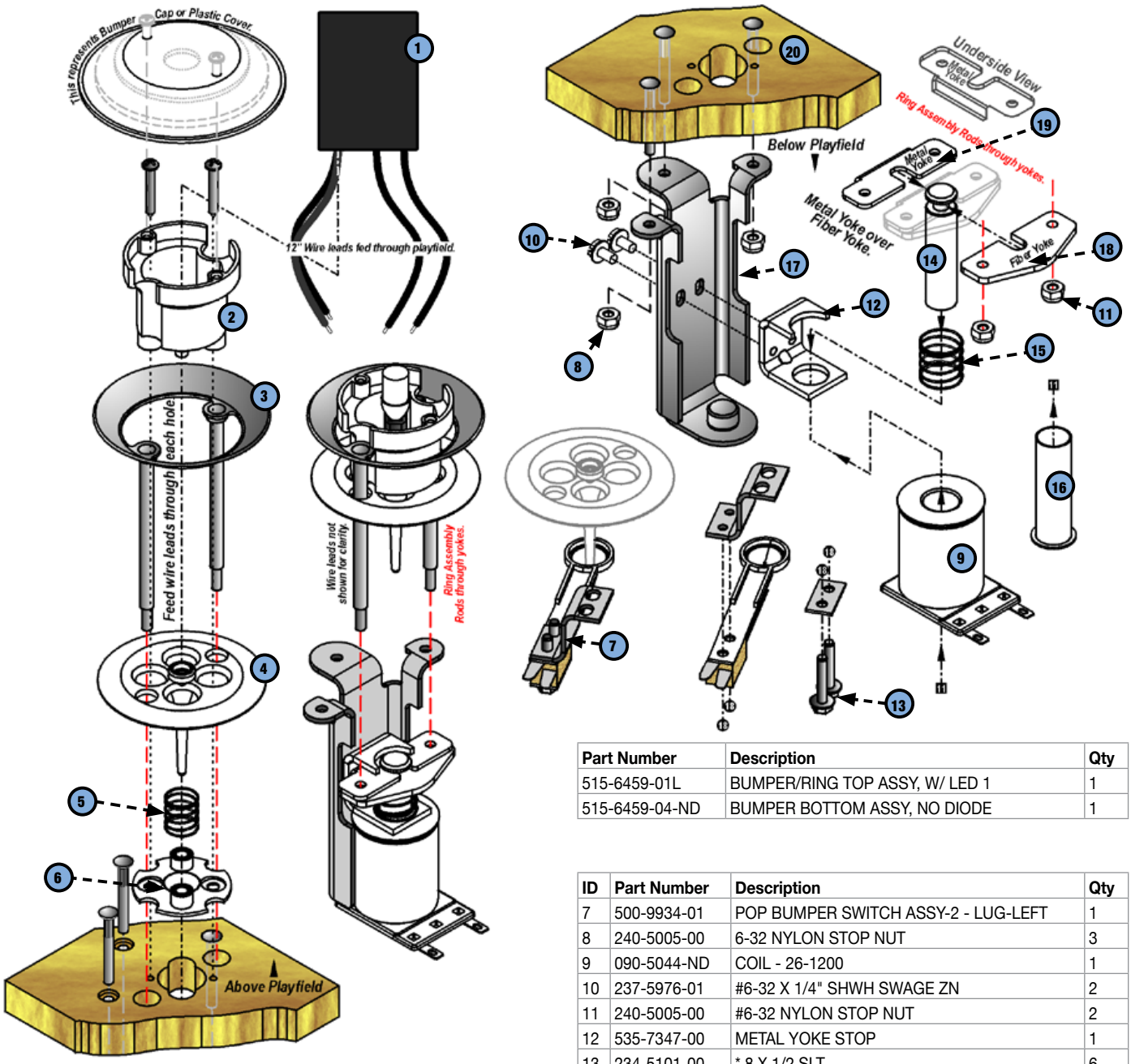

Part Number	Description	Qty
515-6459-01L	BUMPER/RING TOP ASSY, W/ LED 1	1
515-6459-04-ND	BUMPER BOTTOM ASSY, NO DIODE	1

ID	Part Number	Description	Qty
1	520-5307-03	POP BUMPER LED MODULE	1
2	545-5197-00	BUMPER BODY	1
3	515-5085-00	RING AND ROD ASSY	1
4	545-5607-00	BUMPER SKIRT	1
5	266-5048-00	BUMPER SKIRT COMP SPRING	1
6	545-5195-00	BUMPER BASE	1

ID	Part Number	Description	Qty
7	500-9934-01	POP BUMPER SWITCH ASSY-2 - LUG-LEFT	1
8	240-5005-00	6-32 NYLON STOP NUT	3
9	090-5044-ND	COIL - 26-1200	1
10	237-5976-01	#6-32 X 1/4" SHWH SWAGE ZN	2
11	240-5005-00	#6-32 NYLON STOP NUT	2
12	535-7347-00	METAL YOKE STOP	1
13	234-5101-00	* 8 X 1/2 SLT	6
14	530-5348-00	PLUNGER, POP BUMPER	1
15	266-5047-00	COMPRESSION SPRING, POP BUMPER	1
16	545-5031-00	COIL SLEEVE	1
17	515-5939-00	COIL BRACKET POP BUMPER ASSY	1
18	545-5609-00	FIBER YOKE	1
19	535-7346-00	METAL YOKE	1
20	237-5957-00	#6-32 x 1-3/16" SPIRAL FIN SHANK SCREW	3

4.6 SLINGSHOT ASSEMBLY

500-5849-01-ND

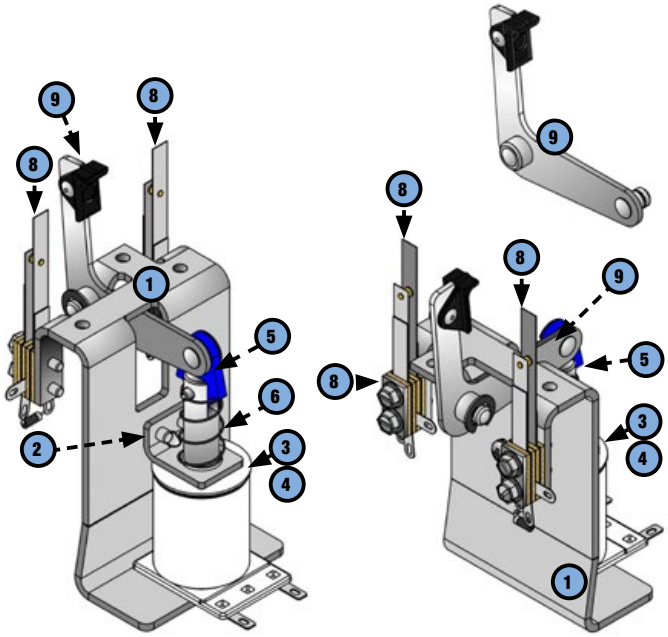

ID	Part Number	Description	Qty
1	515-5339-01	SLINGSHOT BRACKET ASSEMBLY	1
2	535-5203-03	COIL RETAINING BRACKET	1
3	090-5001-ND	COIL, 23-800 [NO DIODE]	1
4	545-5031-00	COIL SLEEVE	1
5	515-5338-00	PLUNGER & LINK ASSEMBLY	1
6	266-5020-00	COMPRESSION (RETURN) SPRING	1
7	180-5054-00	SLINGSHOT STACK (BLADE) SWITCH	2
8	535-5045-00	SWITCH BODY PROTECT PLATE	2
9	515-5340-01	RIVETED ARM & TIP ASSEMBLY	1

4.7 4-BALL TROUGH ASSEMBLY

500-6318-24-ND

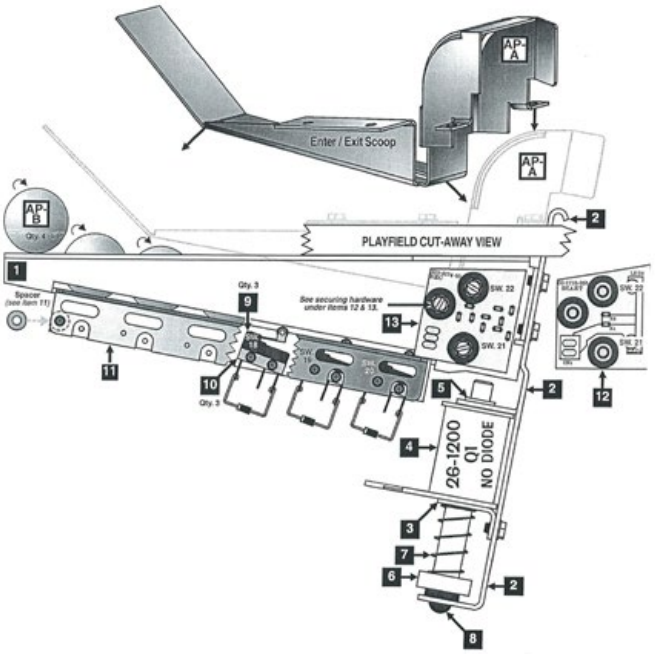

ID	Part Number	Description	Qty
1	515-6580-01	BALL TROUGH OUTHOLE MOUNTING BRACKET	1
2	535-7330-01	COIL MOUNTING BRACKET	1
3	535-5203-03	COIL RETAINING BRACKET	1
4	090-5044-ND	COIL, 26-1200 [NO DIODE]	1
5	545-5076-01	COIL SLEEVE (SHORT)	1
6	515-7309-01	STEEL & NYLON PLUNGER ASM. (3.57")	1
7	266-5020-00	COMPRESSION (RETURN) SPRING	1
8	545-5105-00	RUBBER BUMPER (GROMMET)	1
9	180-5119-02	MICRO SWITCH (ROLLER ACTUATOR, LITE-FORCE)	3
10	535-6539-00	SWITCH BODY PROTECT PLATE	3
11	535-7801-00	TROUGH BALL GUIDE PLATE	1
12	515-0173-00	DUAL OPTO TRANS BOARD ASSEMBLY	1
13	515-0174-00	DUAL OPTO REC BOARD ASSEMBLY	1
AP-A	535-7329-01	BALL TROUGH ENTER/EXIT SCOOP	1
AP-B	260-5000-00	STEEL BALLS (1-1/16")	4

4.8 CANNON MOTOR & SWITCH

500-7213-00

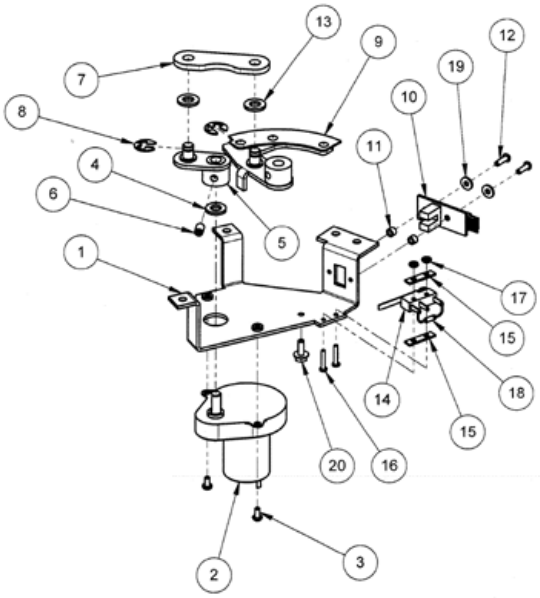

ID	Part Number	Description	Qty
1	515-7781-00	BRACKER, CANNON MOTOR	1
2	511-6968-00	MOTOR & CONN ASSY, 24 VDC, 12 RPM	1
3	237-5909-00	SCREW, 4-40 X 1/4" PPH SEMS	2
4	242-5072-01	NYLON WASHER .252 ID X .472 OD	1
5	515-7777-00	CRANK ASSEMBLY, CANNON	1
6	237-6092-00	SET SCREW, 10-32 X 5/16, SOCKET CUP PT	1
7	545-7280-00	CONNECTOR ARM, CANNON	1
8	270-5002-00	RETAINING RING - 1/4"	2
9	510-5152-00	RIVET ASSEM, CANNON DRIVEN	1
10	520-5292-00	OPTO INTERRUPTOR BOARD - IDLER DISC	1
11	254-5062-02	SPACER, #4 ID, 3/16" OD X .125"	2
12	237-5979-00	SCREW, 4-40 X 3/8", PPH TF (ZINC)	2
13	242-5008-00	WASHER, 1/4" ID X 1/2" OD X 1/16" THICK	2
14	180-5010-04	MICRO-SWITCH	1
15	535-6539-00	SWITCH BODY PROTECT PLATE	2
16	237-5806-00	SCREW, 2-56 X 1/2" PPH MS ZINC	2
17	240-5301-00	2-56 HEX NUT	2
18	112-5003-00	DIODE - 1N4004	1
19	242-5002-00	#4 FLAT WASHER - 5/16" OD	2
20	237-5976-02	SCREW, 6-32 X 3/8 HWH SWAGE	1
99*	036-5573-18-C7	CABLE CANNON MOTOR SW	1

4.9 AC/DC CANNON

500-7214-00

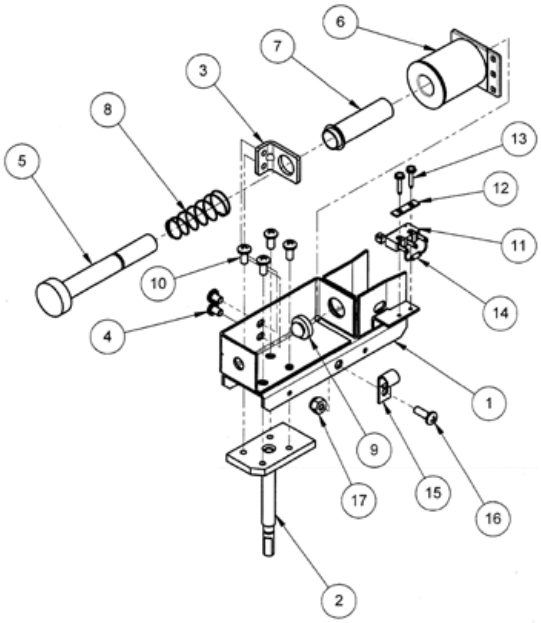

ID	Part Number	Description	Qty
1	515-9598-00	WELDMENT, CANNON BRACKET	1
2	515-7779-00	WELDMENT, CANNON SHAFT	1
3	535-5203-03	COIL RETAINING BRACKET	1
4	232-5300-00	SCREW, 8-32 X 1/4" PPH SEMS	2
5	515-7318-00	PLUNGER ASSEMBLY	1
6	500-7053-00	ASSEMBLY 23-800 COIL & CONN FLEX WIRE	1
7	545-5076-01	COIL SLEEVE	1
8	266-5020-00	COMPRESSION SPRING-CONICAL	1
9	545-5105-00	RUBBER BUMPER	1
10	232-5301-00	SCREW, 8-32 X 3/8" PPH SEMS	4
11	180-5119-02	MICRO-SWITCH - LIGHT ACTUATION	1
12	535-6539-00	SWITCH BODY PROTECT PLATE	1
13	237-5937-02	SCREW, 2-56 X 1/2" HWH MS	2
14	112-5003-00	DIODE - 1N4004	1
15	040-5000-03	1/4" CABLE CLAMP	1
16	232-5302-00	SCREW, 8-32 X 1/2" PPH MS SEMS	1
17	240-5102-00	8-32 NYLON LOCK NUT	1
99*	036-5573-21-C7	CABLE CANNON FIRE SW	1

4.10 FRONT MOLDING ASSEMBLY

500-7238-00

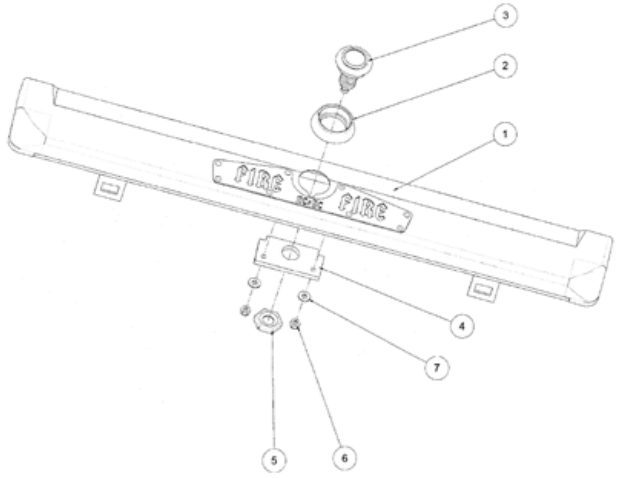

ID	Part Number	Description	Qty
1	500-7235-03-00	FRONT MOLDING ASSEMBLY, LATCHED -W/CENTER BUTTON	1
2	545-7292-10	TOP BUTTON SPACER-MOLDED	1
3	515-7791-00	BUTTON ASSY - CLEAR	1
4	545-7291-00	TOP BUTTON BAR	1
5	240-5003-01	PAL NUT	1
6	240-5102-00	# 8-32 NYLON LOCK NUT	2
7	242-5005-00	#8 WASHER	2

4.11 VERTICAL UP-KICKER

500-7078-01

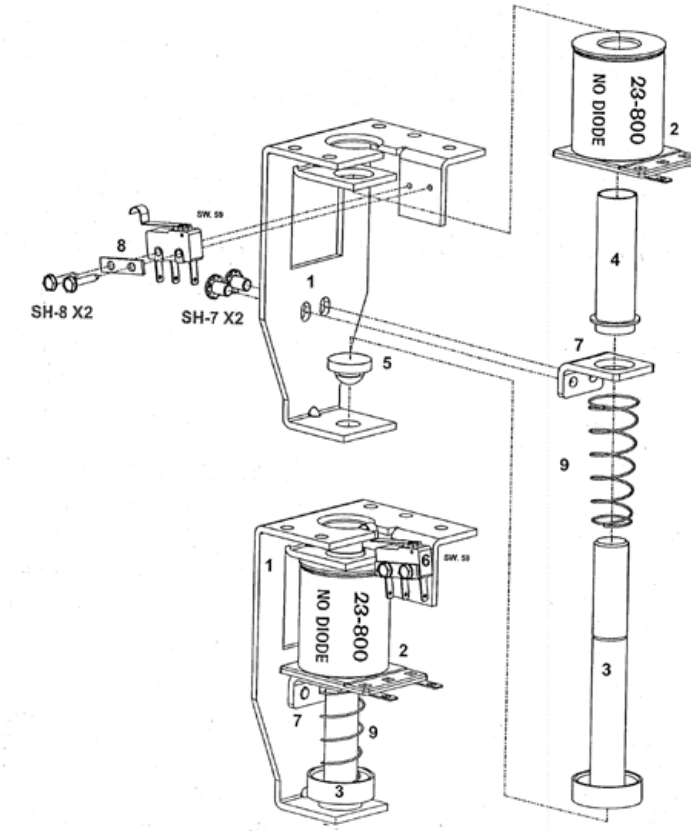

ID	Part Number	Description	Qty
1	535-9590-03	VUK BRACKET - R.H. - NO ACTUATOR	1
2	090-5001-ND	COIL - 23-800, NO DIODE	1
3	515-5941-01	PLUNGER ASSEMBLY	1
4	545-5076-01	COIL SLEEVE	1
5	545-5105-00	RUBBER BUMPER	1
6	180-5209-00	SUB MINIATURE SWITCH - SIM. ROLLER	1
7	535-5203-03	COIL RETAINING BRACKET	1
8	535-6539-00	SWITCH BODY PROTECT PLATE	1
SH-8	237-5937-02	SCREW, 2-56 X 1/2" HWH MS	2
SH-7	232-5300-00	SCREW, 8-32 X 1/4" PPH SEMS	2
9	266-5020-00	COMPRESSION SPRING-CONICAL	1

4.12 LEFT RAMP ASSEMBLY

500-7208-01

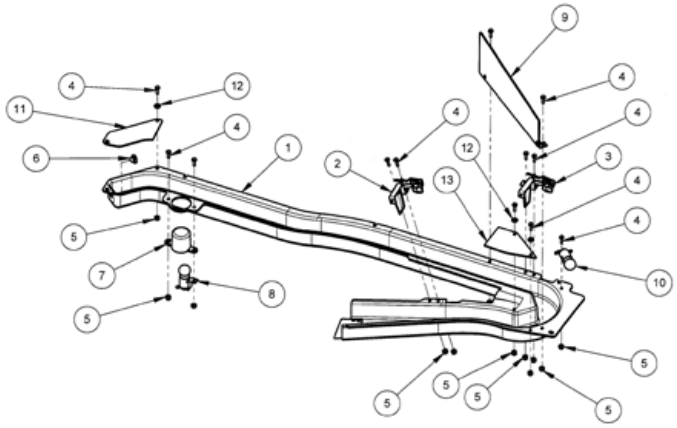

ID	Part Number	Description	Qty
1	510-5147-01	RIVET ASSY, LEFT RAMP, ACDC PRO	1
2	515-6556-03-GE	R/U SWITCH ASSEMBLY -03 W/ GENERIC CABLE	1
3	515-6556-02-GE	R/U SWITCH ASSEMBLY -02 W/ GENERIC CABLE	1
4	232-5202-00	SCREW, 6-32 X 1/2" PPH MS SEMS	12
5	240-5005-00	6-32 NYLON STOP NUT	12
6	545-5105-00	RUBBER BUMPER	1
7	550-5031-06	MINI MARS W/ EARS - YELLOW SB	1
8	511-5241-00	FLASH LAMP ASSY, GENERIC	1
9	510-5163-06	RIVETED ASSY, BUTY #6, ACDC PRO	1
10	511-5241-01	ASSY FLASH LAMP	1
11	830-6151-64	BUTYRATE #64, ACDC PRO	1
12	242-5001-00	#6 WASHER	3
13	830-6151-66	BUTYRATE #66, ACDC PRO	1

4.13 RIGHT RAMP ASSEMBLY

500-7209-01

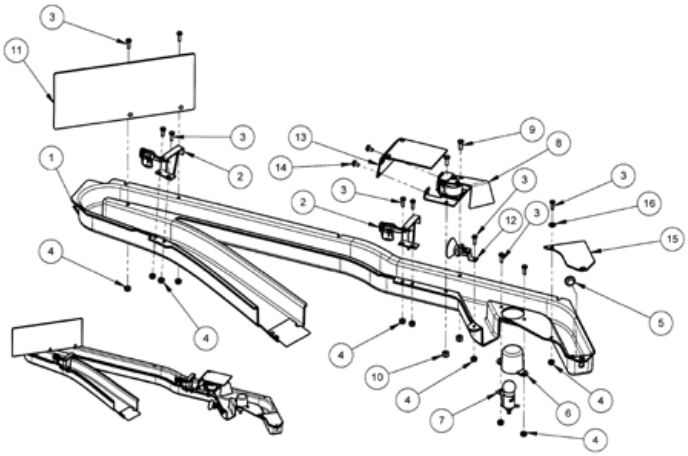

ID	Part Number	Description	Qty
1	510-5148-01	RIVET ASSY, RT RAMP, ACDC PRO	1
2	515-6556-02-GE	R/U SWITCH ASSEMBLY -02 W/ GENERIC CABLE	2
3	232-5202-00	SCREW, 6-32 X 1/2" PPH MS SEMS	10
4	240-5005-00	6-32 NYLON STOP NUT	10
5	545-5105-00	RUBBER BUMPER	1
6	550-5031-02	MINI MARS W/ EARS - RED SB	1
7	511-5241-00	FLASH LAMP ASSY, RIGHT	1
8	515-6596-01-GE	COIL/BRKT/CABLE ASSY, RIGHT	1
9	232-5302-00	SCREW, 8-32 X 1/2" PPH MS SEMS	2
10	240-5102-00	8-32 NYLON LOCK NUT	2
11	510-5163-05	RIVETED ASSY, BUTY #5, ACDC PRO	1
12	511-5240-01	ASSY VIO GI SPOTLIGHT	1
13	510-5163-41	RIVET ASSY, BUTY #41, ACDC PRO	1
14	237-5976-01	SCREW, 6-32 X 1/4 HWH SWAGE	2
15	830-6151-65	BUTYRATE 365, ACDC PRO	1
16	242-5001-00	#6 WASHER	1

4.14 DETONATOR ASSEMBLY

500-7225-01

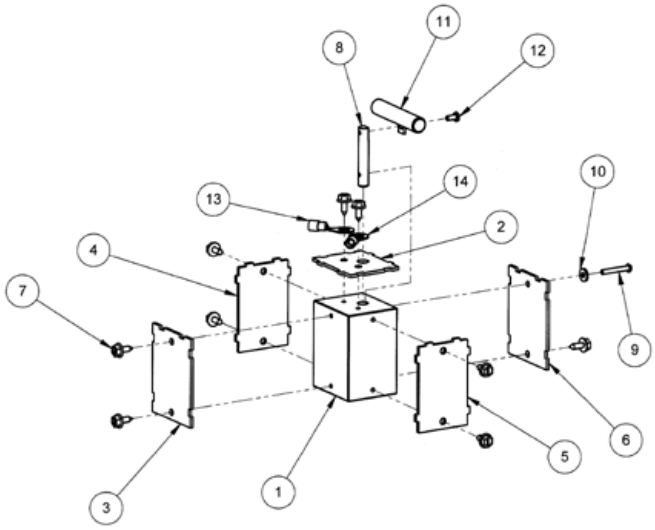

ID	Part Number	Description	Qty
1	525-5815-00	BLACK, DETONATOR, ACDC PRO	1
2	830-6151-28	BUTY #28, DET TOP, ACDC PRO	1
3	830-6151-25	BUTY #25, DET FRONT, ACDC PRO	1
4	830-6151-24	BUTY #24, DET LEFT, ACDC PRO	1
5	830-6151-26	BUTY #26, DET RIGHT, ACDC PRO	1
6	830-6151-27	BUTY #27, DET BACK, ACDC PRO	1
7	234-5000-00	SCREW, #6 X 3/8" HWH	9
8	530-7762-01	PLUNGER, DETONATOR, ACDC PRO	1
9	237-5863-00	SCREW, 4-40 X 3/4 PRH	1
10	242-5002-00	#4 FLAT WASHER - 5/16" OD	1
11	511-6962-00	ASSEMBLY, DET HANDLE, ACDC	1
12	237-6169-00	SCREW, 4-40 X 1/4 PPH MS	1
13	036-5579-00	CABLE, DET RED WIRE, ACDC	1
14	036-5579-01	CABLE, DET BLACK WIRE, ACDC	1

4.15 ELECTRIC BALL GATE

511-5096-01

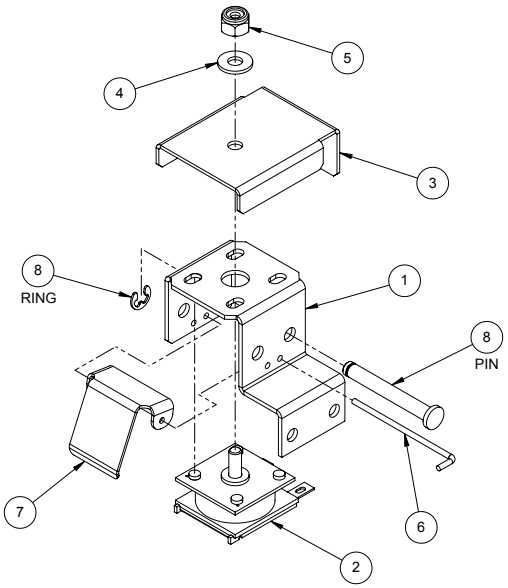

ID	Part Number	Description	Qty
1	535-0134-00	BRACKET, ELEC GATE, BK. PANEL MNT	1
2	090-5060-01-ND	MINI-COIL W/CORE, ND - 32-1250, YELLOW	1
3	535-9577-00	COVER, ELECTRIC GATE	1
4	242-5005-00	#8 WASHER	1
5	240-5102-00	8-32 NYLON LOCK NUT	1
6	535-5372-00	REBOUND HINGE PIN	1
7	535-9682-00	GATE - ELECTRIC (MAGNET)	1
8	530-5702-01	CLEVIS PIN W/ RING, 3/16"D X 1-1/2"	1

4.16 SWINGING BELL ASSEMBLY

500-9874-00

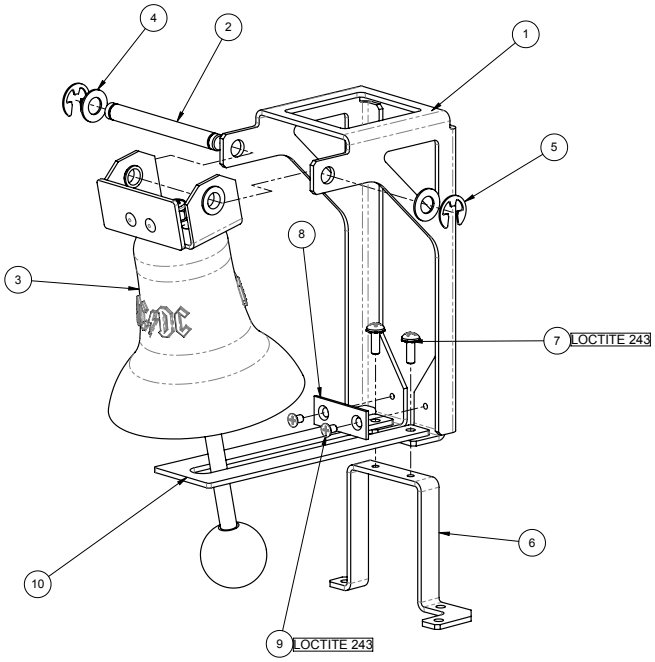

ID	Part Number	Description	Qty
1	535-0899-00	FRAME, SWINGING BELL, AC/DC PRO	1
2	530-7880-00	PIVOT SHAFT, SWINGING BELL, AC/DC PRO	1
3	511-7553-00	ASSEMBLY, BELL/SHAFT, AC/DC PRO	1
4	242-5091-00	WASHER, 1/2 X 17/64 X .03 - DT	2
5	270-5002-00	RETAINING RING - 1/4"	2
6	535-0898-00	MTG. BRACKET, SWINGING BELL, AC/DC PRO	1
7	232-5201-00	SCREW, 6-32 X 3/8" PPH MS SEMS	2
8	535-9648-01	BUMPER HOLDER - FASTENED	1
9	237-6197-00	SCREW, 4-40 X 3/16 PFH U/C 18-8 SS	2
10	535-1181-00	PENDULUM LIMITER - SWING BELL	1

4.17 RIVETED BELL BRACKET ASSEMBLY

510-7487-00

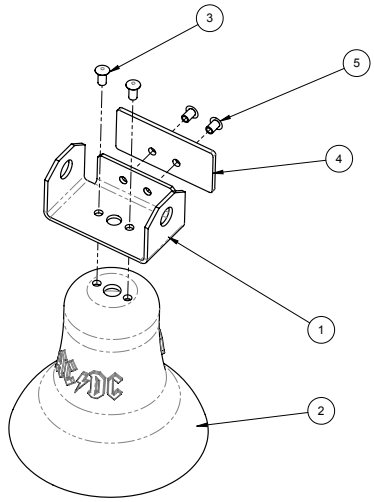

ID	Part Number	Description	Qty
1	535-0900-00	PIVOT BRACKET, SWINGING BELL, AC/DC PRO	1
2	545-7283-00	MOLDED BELL, AC/DC	1
3	249-5003-00	RIVET - 1/8 X 1/4	2
4	830-6151-38	BUTYRATE #38, BELL TOP, AC/DC PRO	1
5	249-5001-00	RIVET - 1/8 X 3/16	2

4.18 BELL SHAFT ASSEMBLY

511-7553-00

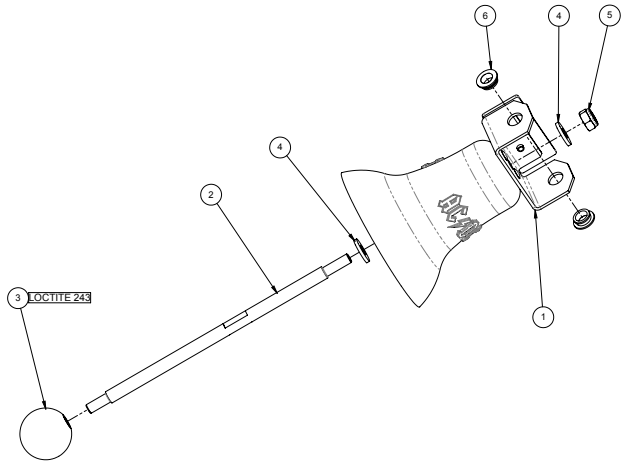

ID	Part Number	Description	Qty
1	510-7487-00	RIVETED ASSY, BELL/BRKT, AC/DC PRO	1
2	530-7756-01	CLAPPER ROD, SWINGING BELL, AC/DC PRO	1
3	260-5013-00	BALL, CARBON, THREADED	1
4	242-5003-00	#10 FLAT WASHER - 1/2" O.D. X .062 THICK	2
5	240-5206-00	#10-24 NYLON LOCK NUT	1
6	545-5423-00	NYLINER, 1/4" SHAFT, 4L1-FF	2

4.19 BACK PANEL ASSEMBLY

500-7207-01

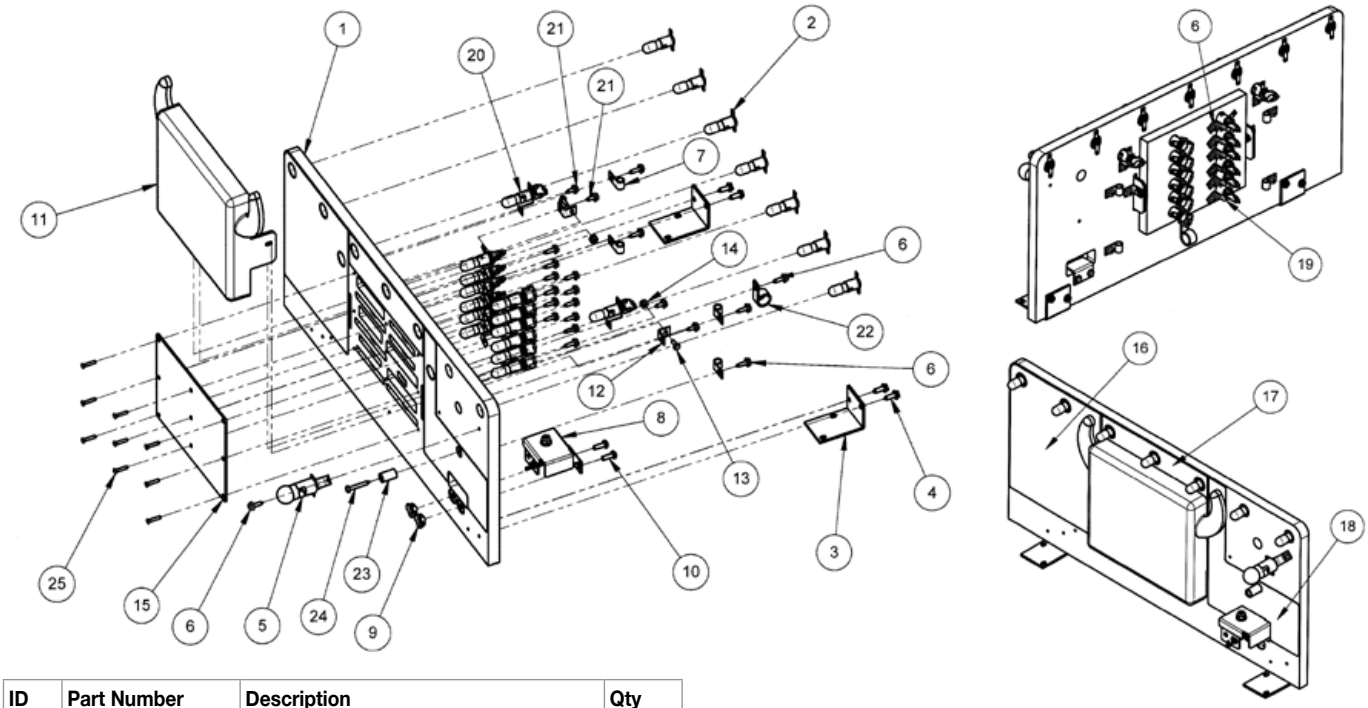

ID	Part Number	Description	Qty
1	525-5713-01	BACK PANEL, ACDC PRO	1
2	519-5000-00-HF	SOCKET & BULB ASSY, CLEAR	7
3	535-8964-00	BRACKET - BACK PANEL SUPPORT	2
4	234-5101-00	SCREW, #8 X 1/2" SLT HWH AB ZINC	4
5	519-5106-00-HF	SOCKET/#89 BULB ASSY - RVSR MNT - HEAVY FIL	1
6	234-5001-02	SCREW, #6 X 1/2" HWH	18
7	040-5000-03	1/4" CABLE CLAMP	4
8	511-5096-01	ASSY, ELEC GATE RIGHT, RAIL MT	1
9	240-5101-00	8-32 T-NUT	2
10	232-5302-00	SCREW, 8-32 X 1/2" PPH MS SEMS	2
11	545-6845-00	JUKEBOX COVER, ACDC	1
12	535-8941-04	BRACKET - PLASTIC MTG	2
13	232-5201-00	SCREW, 6-32 X 3/8" PPH MS SEMS	2
14	240-5005-00	6-32 NYLON STOP NUT	2
15	830-6151-32	BUTY #32, BACK PANEL, ACDC PRO	1
16	820-7000-12	DECAL #12, BACK PANEL LEFT, ACDC	1
17	820-7000-14	DECAL #14, BACK PANEL CENTER, ACDC	1
18	820-7000-13	DECAL #13, BACK PANEL RIGHT, ACDC	1
19	519-5008-00-HF	SOCKET/BULB/DIODE, CLEAR - HEAVY FIL	12
20	519-5008-02-HF	SOCKET/BULB/DIODE, RED - HEAVY FIL	2
21	234-5000-00	SCREW, #6 X 3/8" HWH	4
22	040-5000-06	1/2" CABLE CLAMP	1
23	254-5000-14	NYLON SPACER - BLACK - 3/8 OD X .175 ID X 5/8"	1
24	232-5004-00	SCREW, #6 X 1 PPH AB ZINC	1
25	237-5833-00	SCREW, #4 X 5/8" PFH - BLACK	9
96*	036-5639-15-C5	BACK PANEL LAMPS CABLE ASSEMBLY	1
97*	600-5003-00	BRAIDED WIRE - 20GA.	3 FT
98*	631-5000-00	STAPLE - 5/16	18
99*	036-5639-04-C5	BACK PANEL ASSEMBLY	1

5. SCHEMATICS, WIRING & PCBS

5.1 BACKBOX WIRING

COILS DETAILED CHART TABLE

High Current Coils Group 1		Drive Transistor	Driver Ouput PCB	Power Line Color	Power Line Connection	Power Voltage	Drive Transistor Control Line Color	D.T. Control Line Connect	Coil GA-Turn or Bulb Type
#1	TROUGH UP-KICKER	Q1	▲ I/O Power Driver ▼	YEL-VIO	J10-P9/10	50VDC	BRN-BLK	J8-P1	26-1200 ↻ 090-5044-ND
#2	AUTO LAUNCH	Q2		YEL-VIO	J10-P9/10	50VDC	BRN-RED	J8-P3	23-800 ↻ 090-5001-ND
#3	CANNON EJECT	Q3		YEL-VIO	J10-P9/10	50VDC	BRN-ORG	J8-P4	23-800 ↻ 090-5001-ND
#4	RIGHT RAMP DIVERTER	Q4		YEL-VIO	J10-P9/10	50VDC	BRN-YEL	J8-P5	32-1800 ↻ 515-6595-01-ND
#5	RIGHT CONTROL GATE	Q5		YEL-VIO	J10-P9/10	20VDC	BRN-GRN	J8-P6	32-1250 ↻ 090-5060-01-ND
#6		Q6					BRN-BLU	J8-P7	
#7		Q7					BRN-VIO	J8-P8	
#8	SHAKER MOTOR (OPTIONAL)	Q8		RED-WHT	J17-P7	50VDC	BRN-GRY	J8-P9	S. Motor Kit 502-5027-00
High Current Coils Group 2		**Drive Transistor**	**Driver Ouput PCB**	**Power Line Color**	**Power Line Connection**	**Power Voltage**	**Drive Transistor Control Line Color**	**D.T. Control Line Connect**	**Coil GA-Turn or Bulb Type**
#9	LEFT POP BUMPER	Q9	▲ I/O Power Driver ▼	YEL-VIO	J10-P9/10	50VDC	BLU-BRN	J9-P1	26-1200 ↻ 090-5044-ND
#10	RIGHT POP BUMPER	Q10		YEL-VIO	J10-P9/10	50VDC	BLU-RED	J9-P2	26-1200 ↻ 090-5044-ND
#11	BOTTOM POP BUMPER	Q11		YEL-VIO	J10-P9/10	50VDC	BLU-ORG	J9-P4	26-1200 ↻ 090-5044-ND
#12	TOP EJECT	Q12		YEL-VIO	J10-P9/10	50VDC	BLU-YEL	J9-P5	23-800 ↻ 090-5001-ND
#13	LEFT SLINGSHOT	Q13		YEL-VIO	J10-P9/10	50VDC	BLU-GRN	J9-P6	26-1200 ↻ 090-5044-ND
#14	RIGHT SLINGSHOT	Q14		YEL-VIO	J10-P9/10	50VDC	BLU-BLK	J9-P7	22-1200 ↻ 090-5044-ND
#15	LEFT FLIPPER (50v RED/YEL)	Q15		GRY-YEL~3A Fuse~RED-YEL	J10-P6/7	50VDC	ORG-GRY	J9-P8	22-1080 ↻ 090-5032-ND
#16	RIGHT FLIPPER (50v RED/YEL)	Q16		BLU-YEL~3A Fuse~RED-YEL	J10-P6/7	50VDC	ORG-VIO	J9-P9	22-1080 ↻ 090-5032-ND
Low Current Coils Group 1		**Drive Transistor**	**Driver Ouput PCB**	**Power Line Color**	**Power Line Connection**	**Power Voltage**	**Drive Transistor Control Line Color**	**D.T. Control Line Connect**	**Coil GA-Turn or Bulb Type**
#17	TRAIN FLASHER	Q17	▲ I/O Power Driver ▼	ORANGE	J6-P10	20VDC	VIO-BRN	J7-P2	LED 113-5034-08
#18		Q18					VIO-RED	J7-P3	
#19		Q19					VIO-ORG	J7-P4	
#20	LEFT RAMP FLASHER	Q20		ORANGE	J6-P10	20VDC	VIO-YEL	J7-P6	LED 113-5034-08
#21	LEFT SIDE FLASHER	Q21		ORANGE	J6-P10	20VDC	VIO-GRN	J7-P7	LED 113-5034-08
#22	BACK PANEL FLASHER	Q22		ORANGE	J6-P10	20VDC	VIO-BLU	J7-P8	LED 113-5034-08
#23	TOP EJECT FLASHER	Q23		ORANGE	J6-P10	20VDC	VIO-BLK	J7-P9	LED 113-5034-08
#24	OPTIONAL (e.g. COIN METER)	Q24		RED	J16-P4-8	5VDC	VIO-GRY	J7-P10	Optional 5VDC

↻ **Coil Note:** ↻ **-ND** *means 'No Diode'. -00**B** or -00**T** can be used for coil replacements, but the diode must be removed. Call for more info.*

Low Current Coils Group 2		Drive Transistor	Driver Ouput PCB	Power Line Color	Power Line Connection	Power Voltage	Drive Transistor Control Line Color	D.T. Control Line Connect	Coil GA-Turn or Bulb Type
#25	POP BUMPERS FLASH	Q25	▲ I/O Power Driver ▼	ORANGE	J6-P10	20VDC	BLK-BRN	J6-P1	LED 113-5034-08
#26	BELL ARROW FLASHER	Q26		ORANGE	J6-P10	20VDC	BLK-RED	J6-P2	LED 113-5034-08
#27	LEFT RAMP LEFT SIDE FLASHER	Q27		ORANGE	J6-P10	20VDC	BLK-ORG	J6-P3	LED 112-5041-08
#28	LEFT RAMP RIGHT SIDE FLASHER	Q28		ORANGE	J6-P10	20DC	BLK-YEL	J6-P4	LED 112-5041-08
#29	RIGHT RAMP RIGHT SIDE FLASHER	Q29		ORANGE	J6-P10	20VDC	BLK-GRN	J6-P5	LED 112-5041-08
#30	RIGHT RAMP FLASHER	Q30		ORANGE	J6-P10	20VDC	BLK-BLU	J6-P6	LED 113-5034-08
#31	RIGHT SIDE FLASHER	Q31		ORANGE	J6-P10	20VDC	BLK-VIO	J6-P7	LED 113-5034-08
#32	CANNON MOTOR	Q32		ORANGE	J6-P10	20VDC	BLK-GRY	J6-P8	MOTOR 041-5111-00

Note: *In Test Flash Lamps Menu ("Flash" Icon), only Flashers are tested in numeric order.* ***This Game:*** *Q21, Q23, Q25 – Q31*

If Ticket Meter / Dispenser Installed :		Drive Trans.	Driver Ouput PCB	Power Line Color	Power Line Connection	Power Voltage	Drive Transistor Control Line Color	D.T. Control Line Connect	Coil GA-Turn or Bulb Type
#33	AUX 1: TICKET ADVANCE (ENABLE)	Q1	▲ Aux. Driver ▼	RED	J16-P4-8	5VDC 1K RES. PULL-UP	WHITE	J2-P3	Ticket Dispenser
#34	AUX 2: TICKET METER	Q2		RED	J16-P4-8		BROWN	J2-P4	Ticket Meter
#35	AUX 3: SWITCHED GROUND	Q3		GRY-RED	J16-P3	12VDC	BLK-WHT	J2-P7	Ticket Dispenser

BOX I/O POWER DRIVER BOARD DETAILED WIRING DIAGRAM

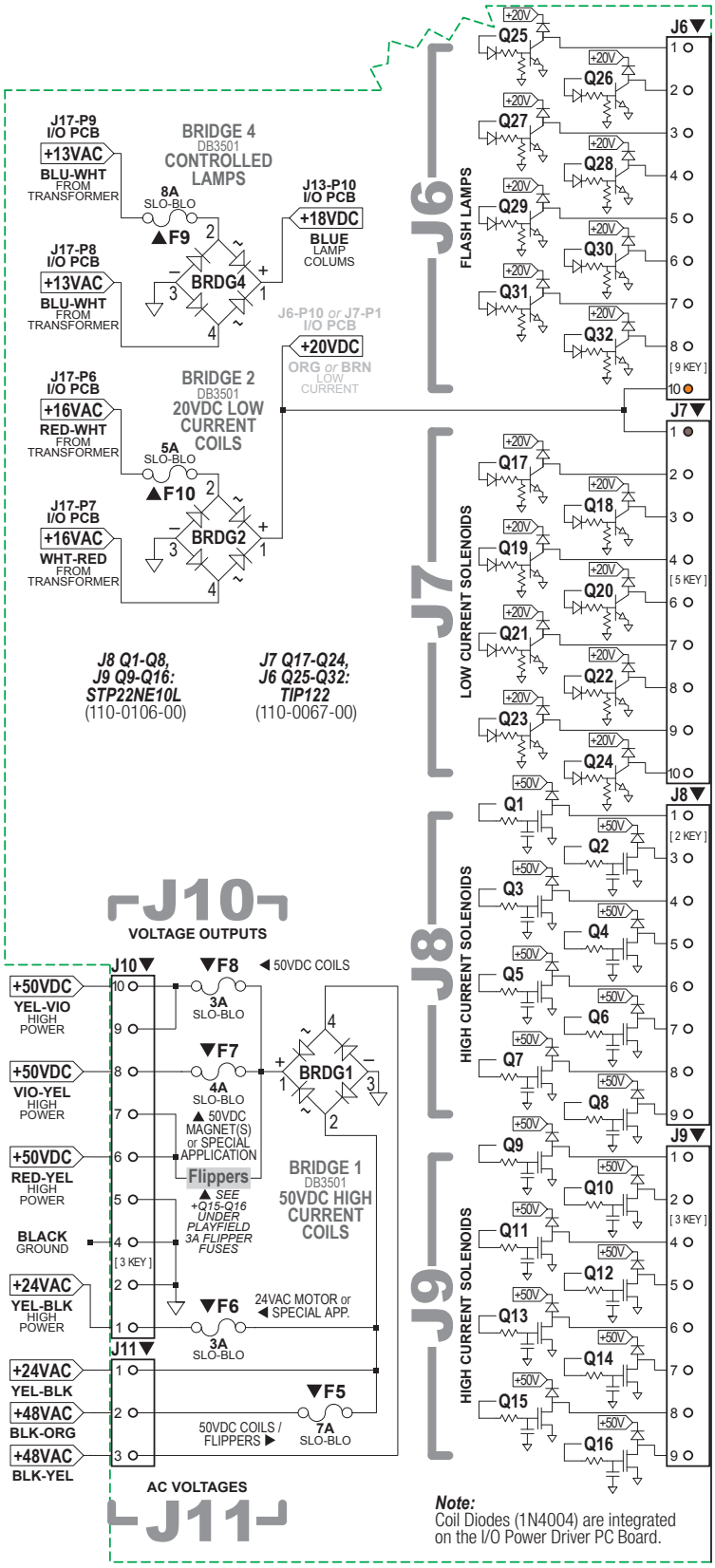

BACKBOX BOARD LAYOUT WIRING DIAGRAM

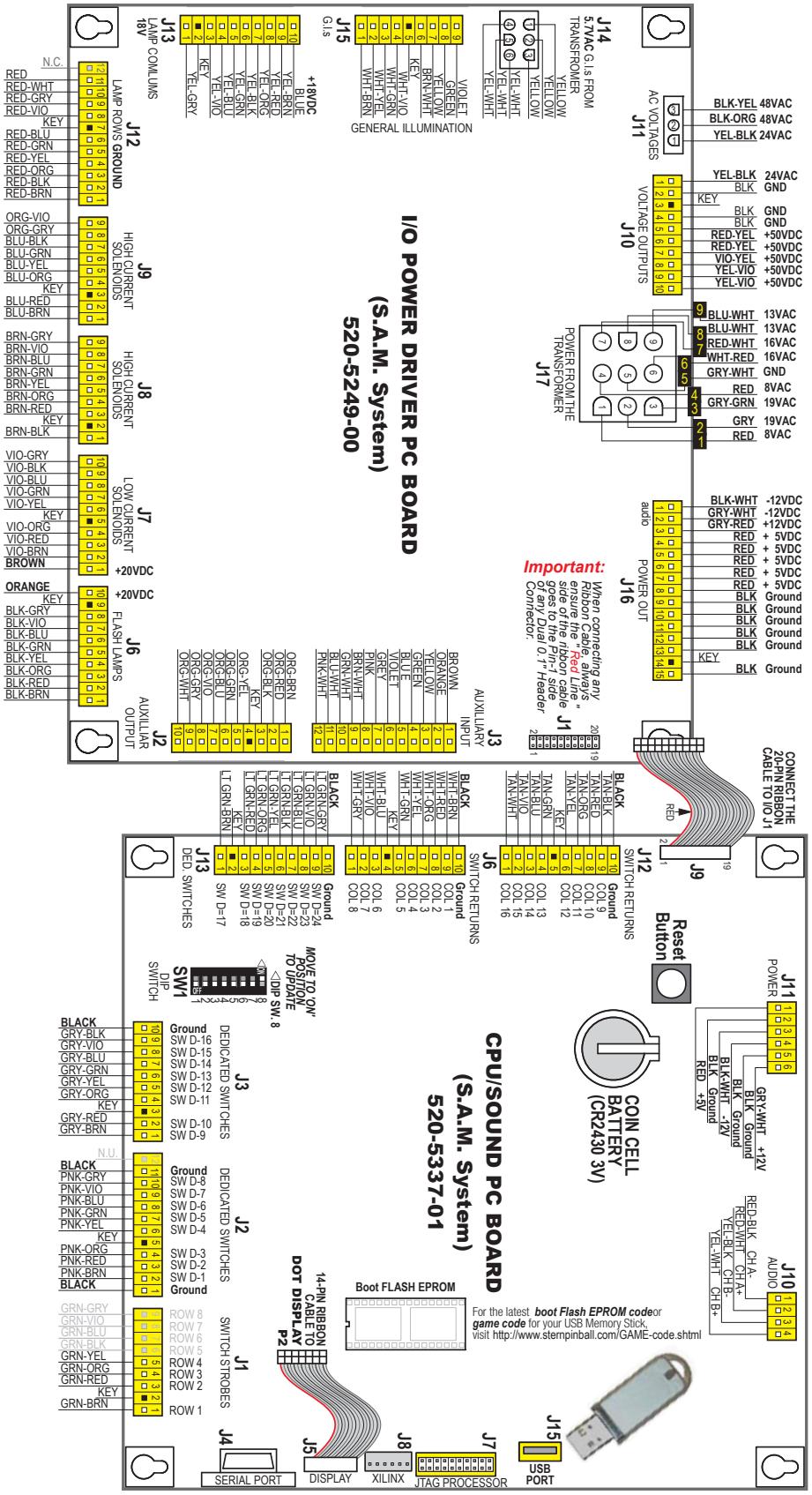

5.2 PLAYFIELD WIRING

GENERAL ILLUMINATION CIRCUIT DETAILED WIRING DIAGRAM

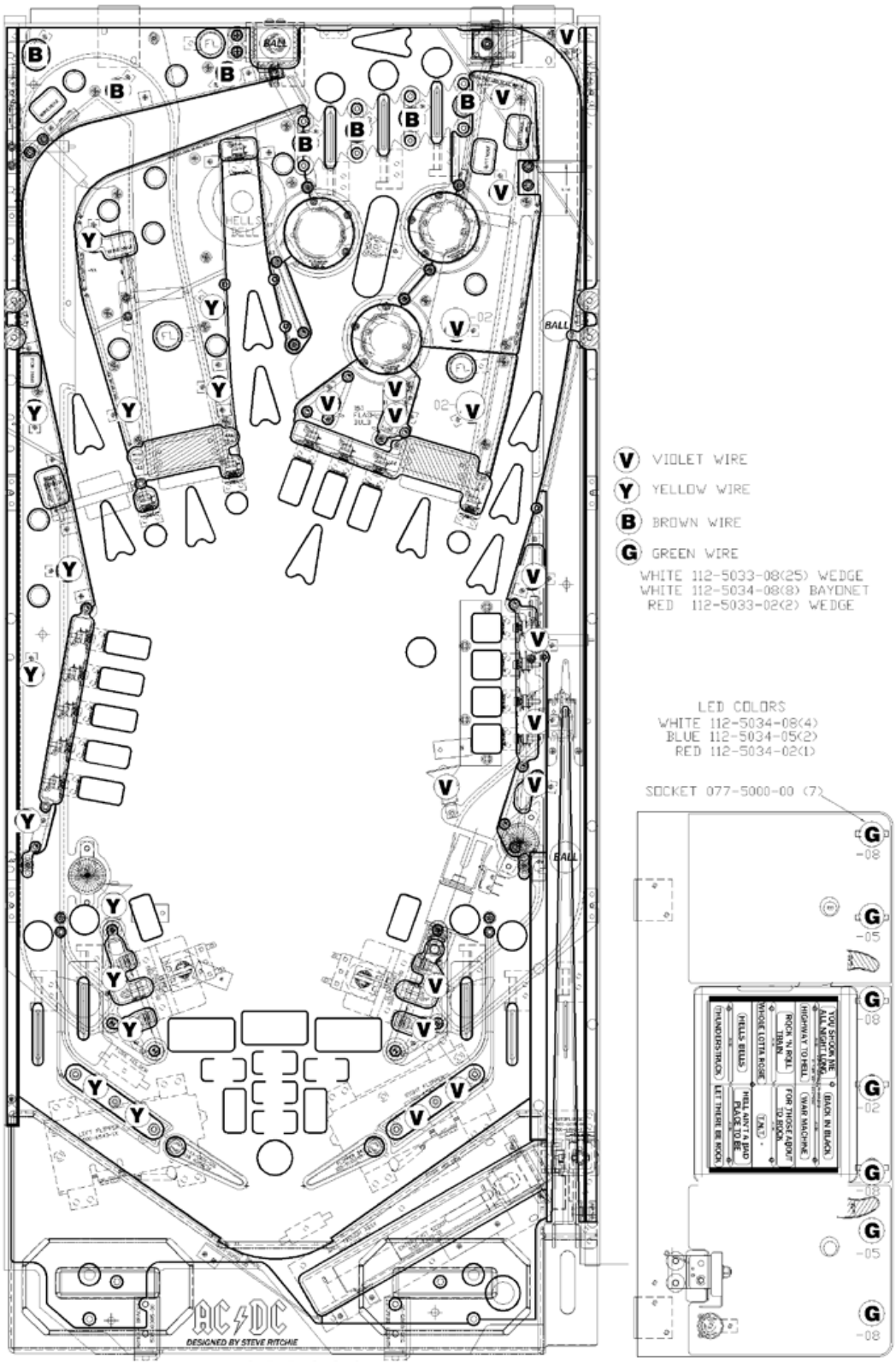

3-FIPPER CIRCUIT WIRING DIAGRAM

The outside left flipper button located on the cabinet operates both the left flipper & upper left flipper, if used. The outside right flipper button located on the cabinet operates both the right flipper & upper right flipper, if used. Right & Left Buttons: These switches are double-stacked. Pressing half-way down operates the lower flippers (respectively); pressing full down operates both the lower flipper & upper flippers (respectively) simultaneously.

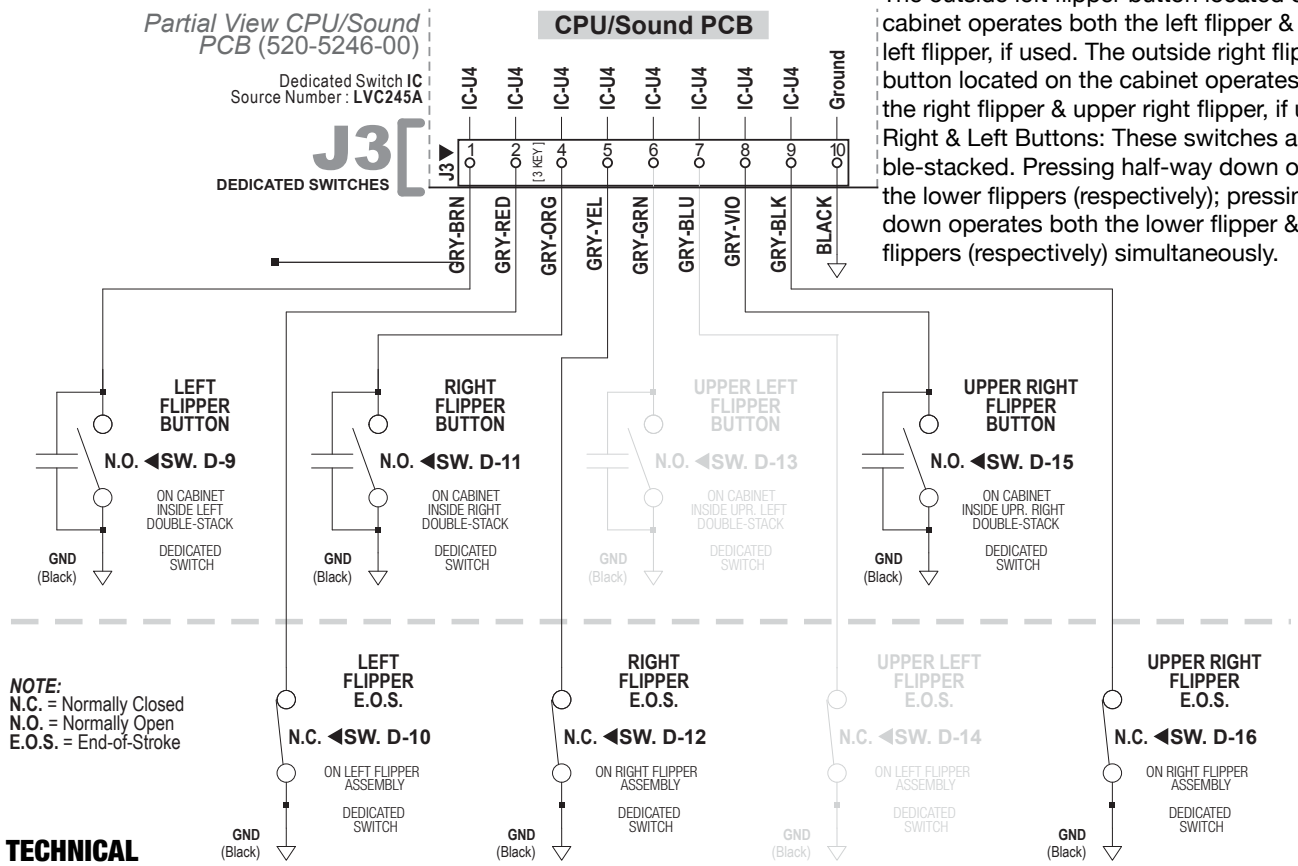

TECHNICAL OVERVIEW

Our flipper system used one supply voltage (+50VDC) for both kick & hold. Once the game CPU detects a flipper cabinet switch closure (during gameplay) it applies a 40msec pulse to the gate of the flipper drive transistor (STP22NE10L). If it continues to detect a flipper cabinet switch closure (the player holding the button in) it will continue to pulse the flpper drive transistor 1msec every 12msecs for the duration of the hold cycle.

The E.O.S (End-Of-Stroke) switch serves the same function as before as it prevents foldback when the player has the flipper energized to capture balls. The E.O.S. Dedicated Switch is a normally closed switch which opens approximately 1/16" when the flipper is energized. The game CPU will detect a switch closure if the flipper bat is forced back by a high velocity shot or rebound on the playfield and will apply another 40msec pulse of 50VDC to the coil.

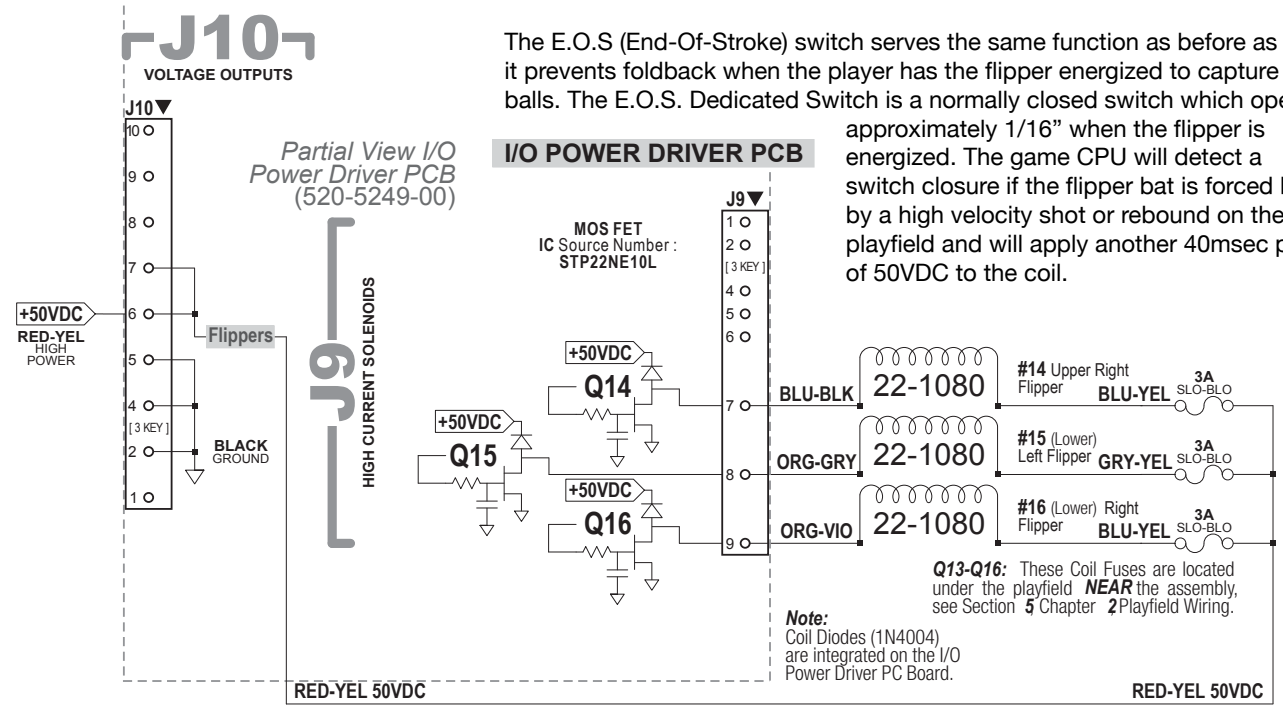

5.3 CABINET AND COIN DOOR WIRING

TRANSFORMER POWER WIRING DIAGRAM

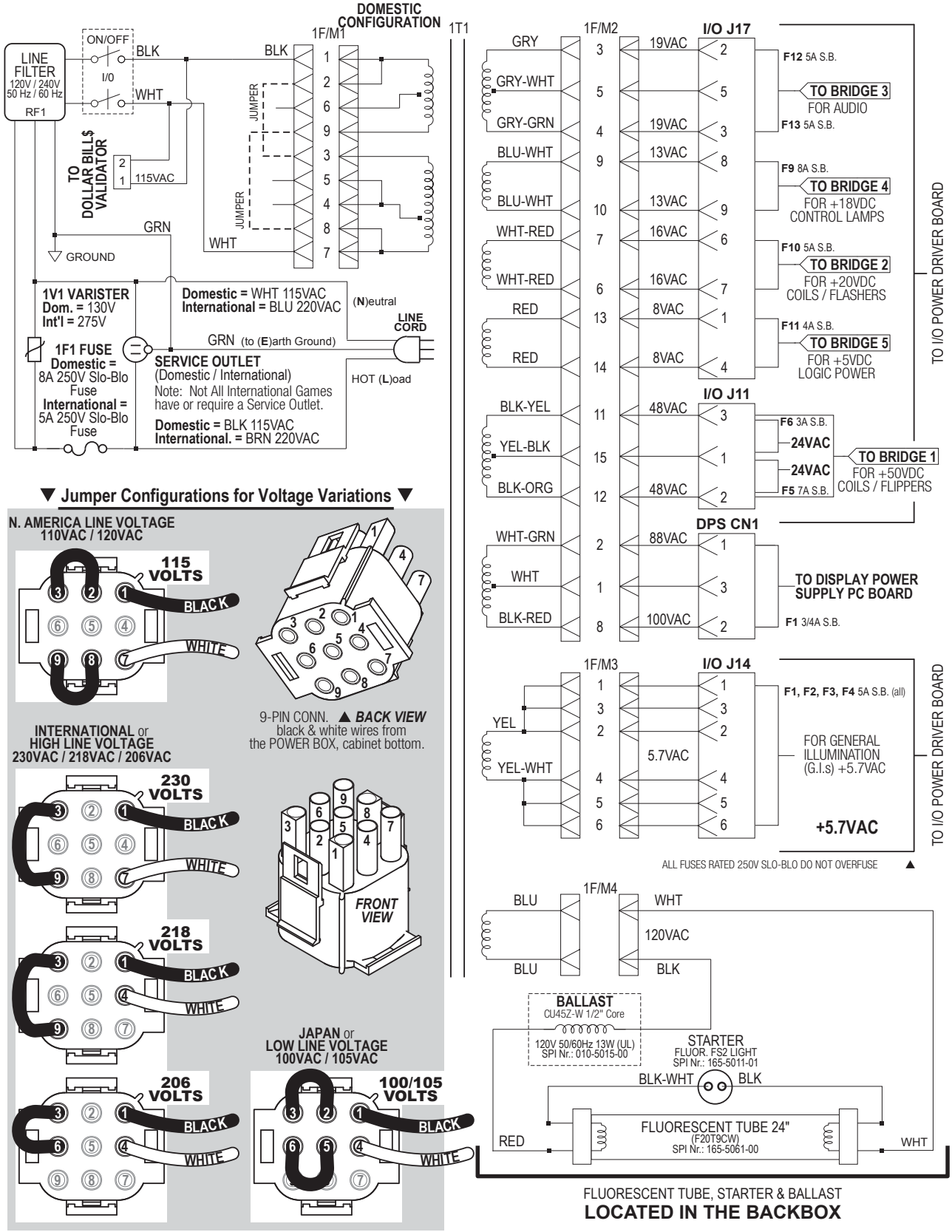

CABINET WIRING DIAGRAM

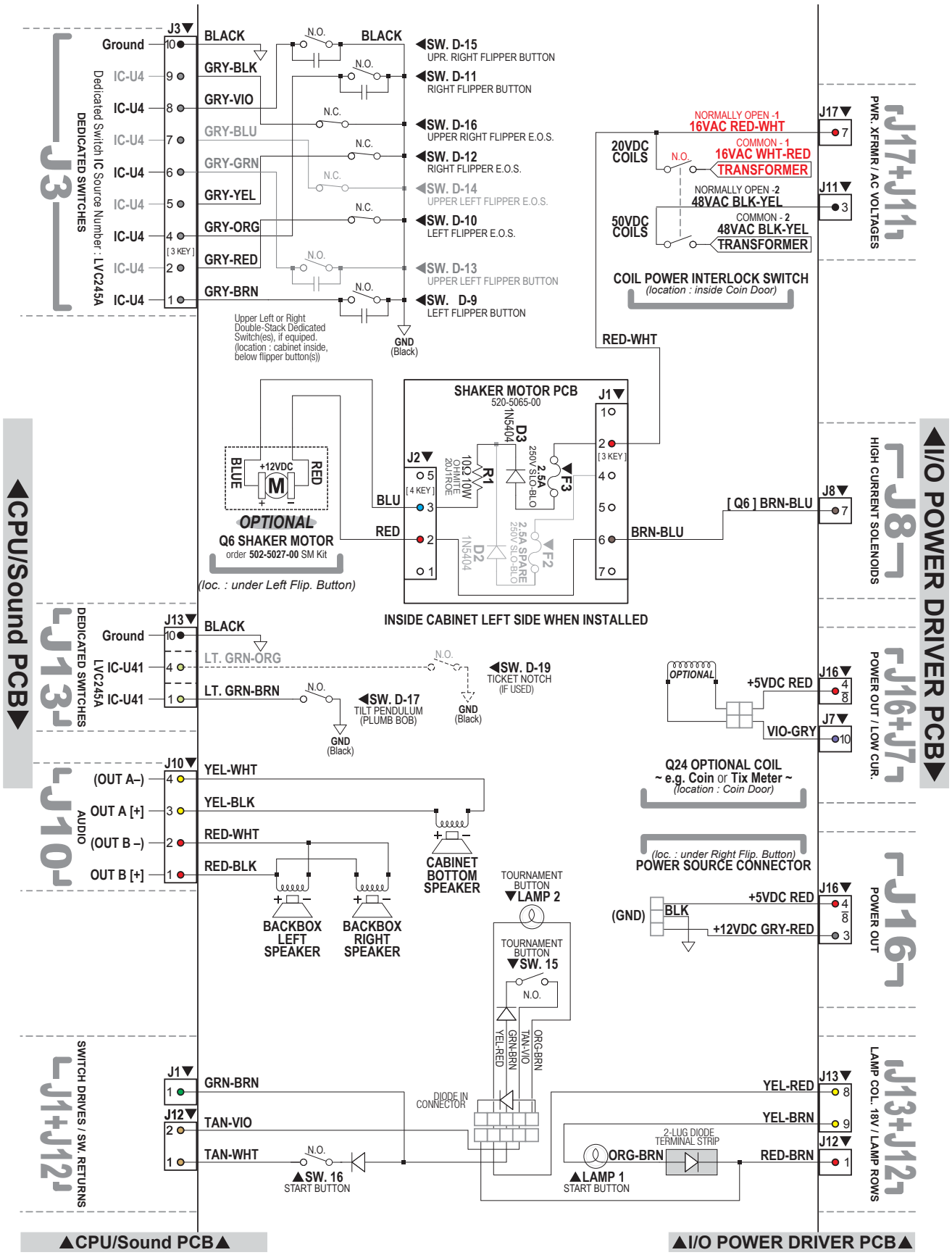

COIN DOOR WIRING DIAGRAM

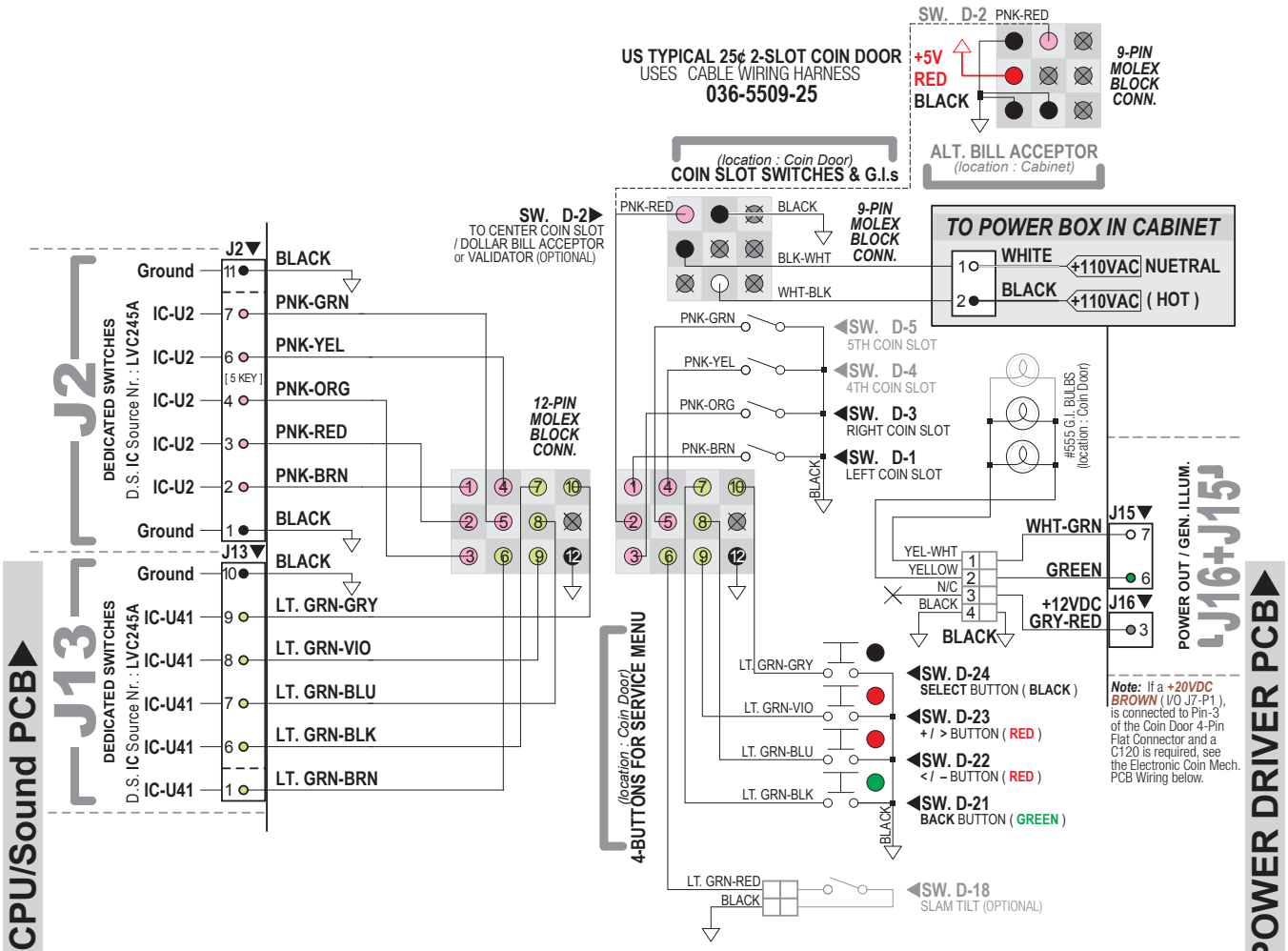

1-SLOT COIN DOOR WITH C120 CAPABILITIES (NO INTERFACE COIN MECH PCB REQUIRED)
USES CABLE WIRING HARNESS
036-5509-31A (+12VDC GRY-RED)

036-5509-31B (ICT/KAL ONLY) / 036-5509-31C (ODA ONLY) / 036-5509-31D (SPAIN ONLY)

NON-US NON-C120 2-SLOT COIN DOOR
USES CABLE WIRING HARNESS
036-5509-32

NON-US NON-C120 3-SLOT COIN DOOR
USES CABLE WIRING HARNESS
036-5509-33

IF YOUR GAME HAS AN ELECTRONIC COIN MECH. INTERFACE PC BOARD (520-5193-00):

1-SLOT COIN DOOR USE WITH C120 CAPABILITIES REQUIRING PCB 520-5193-00
USES CABLE WIRING HARNESS
036-5509-31 (S.A.M. SYSTEM)

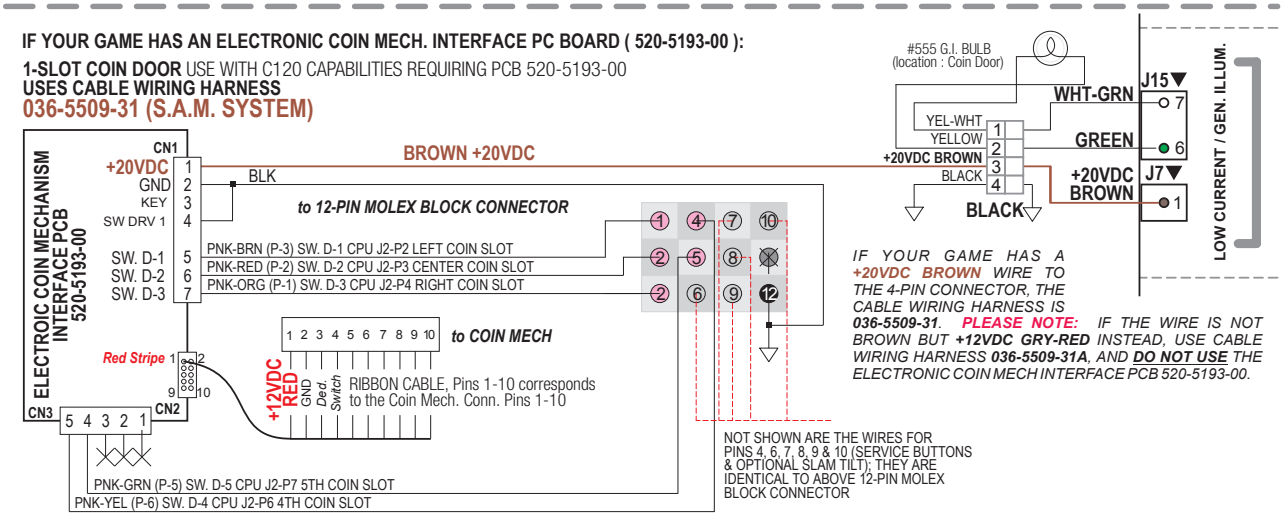

*IF YOUR GAME HAS A **+20VDC BROWN** WIRE TO THE 4-PIN CONNECTOR, THE CABLE WIRING HARNESS IS **036-5509-31**. **PLEASE NOTE:** IF THE WIRE IS NOT BROWN BUT **+12VDC GRY-RED** INSTEAD, USE CABLE WIRING HARNESS **036-5509-31A**, AND **DO NOT USE** THE ELECTRONIC COIN MECH INTERFACE PCB 520-5193-00.*

~ WIRING CONFIGURATION WILL VARY ACCORDING TO COUNTRY ~

5.4 PRINTED CIRCUIT BOARDS

TROUGH UP-KICKER DUAL OPTO PCBS

THEORY OF OP. & SCHEMATIC

As light from the Transmitter LED1 falls on the Receiver LED1, it generates a Positive Bias Voltage (0.7v to 15.v) which is applied to the Gate (G) of Q1 (Fet 2N5460) turning Q1 off. When Q1 is held off, no current flows through Q2's (2N3906) Base (B). With no base current, Q2 is off and acts as an open switch, When the light is interrupted (blocked) R1 (Rec. Bd.) bleeds the gate voltage off of Q1 allowing it to conduct, switching Q2 on, which acts as a closed switch. The LED2 (Trans/Rec) Circuit operates identical as the LED1 Circuit.

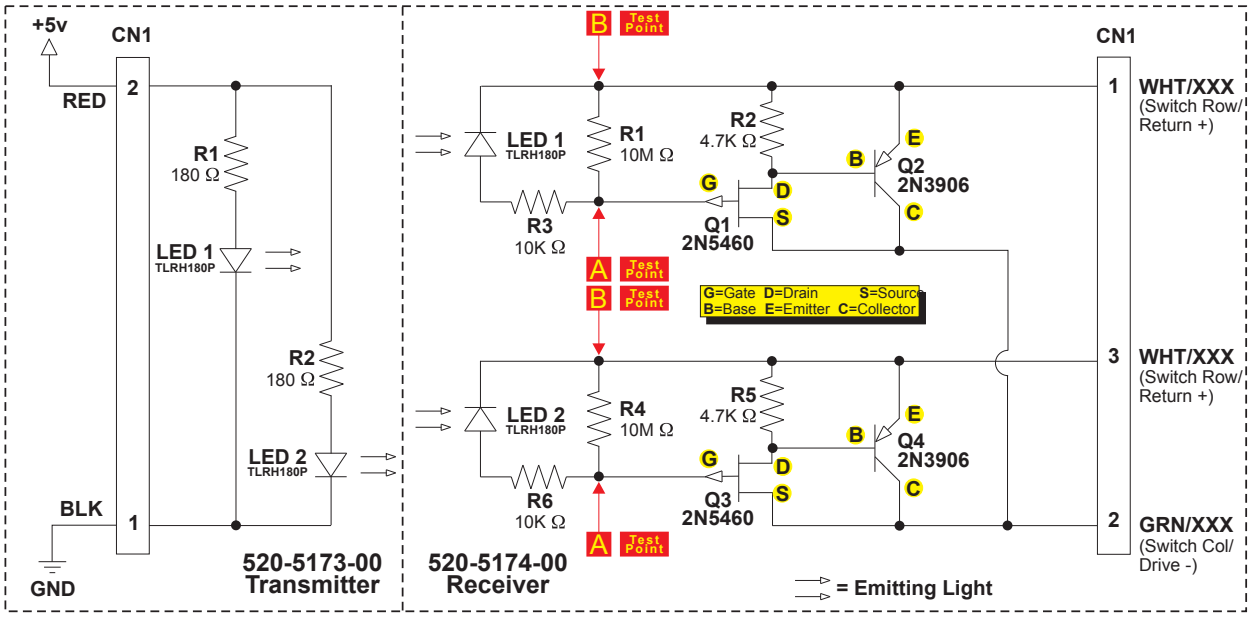

TROUGH UP-KICKER DUAL OPTO PCBS

COMPONENT LAYOUT & PARTS

520-5173-00 (TRANS) — **Boards Actual Size** (Screened Text Printed Larger for Clarity) — **520-5174-00 (REC)**

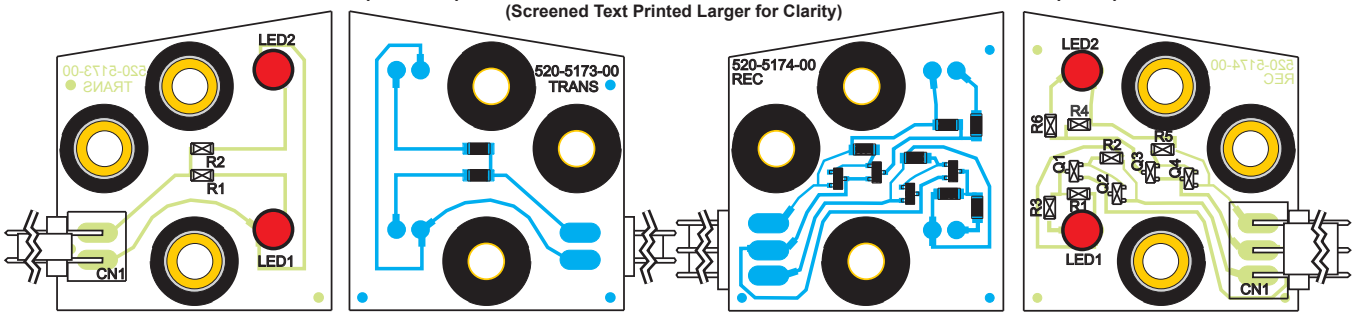

Front Side (LEDs & 2-Pin Connector) | Back Side (Solder / Surface Mounts) | Back Side (Solder / Surface Mounts) | Front Side (LEDs & 3-Pin Connector)

ITEM	QTY	PART NUMBER	REF-DESIGNATOR	DESCRIPTION
A+C & D	**1**	**515-0173-00**	**Dual-OPTO Transmitter PCB Assembly** *(Item **A** PCB + Items **C & D**)*	
A	**1**	**520-5173-00**	**Dual-OPTO Transmitter PCB**	*(includes Items **A-1 – A-3**)*
A-1	1	045-5111-02	CN1	2X, .156" Rt. Angle (26-60-5020) Conn.
A-2	**2**	**165-5052-00**	**LED1, LED2**	**LED TLRH180P (Ultra Bright Red)**
A-3	2	121-5067-00	R1, R2	180 Ω Resistor SMT, 1/8W (CRCW)
B+C & D	**1**	**515-0174-00**	**Dual-OPTO Receiver PCB Assembly** *(Item **B** PCB + Items **C & D**)*	
B	**1**	**520-5174-00**	**Dual-OPTO Receiver PCB**	*(includes Items **B-1 – B-7**)*
B-1	1	045-5111-03	CN1	3X, .156" Right Angle (26-60-5030) Conn.
B-2	**2**	**165-5052-00**	**LED1, LED2**	**LED TLRH180P (Ultra Bright Red)**
B-3	2	110-5006-00	Q1, Q3	2N5460, Transistor (P-FET SOT-23)
B-4	2	110-0086-00	Q2, Q4	**2N3906**, Transistor
B-5	2	121-5082-00	R1, R4	10M Ω Resistor SMT, 1/8W (CRCW)
B-6	2	121-5083-00	R2, R5	4.7K Ω Resistor SMT, 1/8W (CRCW)
B-7	2	121-5011-00	R3, R6	10K Ω Resistor SMT, 1/8W (CRCW)
C	3/per	530-5308-02		OPTO PCB Brass Tube Spacer
D	3/per	545-5518-00		OPTO PCB Rubber Grommet

Replacement Part:
LED TLRH180P
(T1-3/4 GaAlAs)
SPI Part NI:
165-5052-00

OPTO TROUBLESHOOTING

1. VOLT METER TEST (INDICATES NORMAL OPERATING CONDITION):

A. OPEN OPTO (Light Falling on LED) = SWITCH OPEN. Place meter leads across points A and B on the LED1 Circuit (Refer to Schematic Drawing on previous page, 520-5174-00 Receiver Side). It should read approximately 0.8 - 1.2v DC. The LED2 Circuit operates the same.

B. CLOSED OPTO (Ligth Blocked) = SWITCH CLOSED. Place meter leads across points A and B on the LED1 Circuit (Refer to Schematic Drawing on previous page, 520-5174-00 Receiver Side). It should read approximately 0.0 - 0.1v DC. The LED2 Circuit operates the same.

2. OSCILLOSCOPE TEST (INDICATES NORMAL OPERATING OCNDITION):

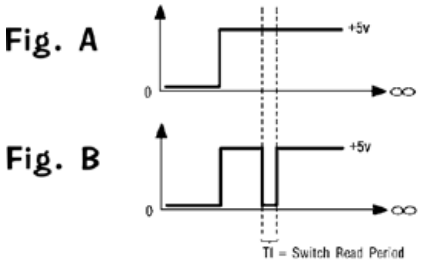

A. OPEN OPTO (Light Falling on LED) = SWITCH OPEN. Place Scope lead at Pin-1 of OPTO Rec. Board with Scope Grounded (see schematic). The Scope should display a steady +5v as shown in Fig. A, Wave Form Diagram.

B. CLOSED OPTO (Ligth Blocked) = SWITCH CLOSED. Place Scope lead at Pin-1 of OPTO Rec. Board with Scope Grounded (see schematic). The scope should display a Pulse Stream indicating Q2 has switched “On” as shown in Fig. B, Wave Form Diagram. This is your switch drive pulse.

3. BENCH TEST (SEE FIG. C):

Please Note: To perform this test you must use a spare 560 Ω Pull-Up Resistor, SPI No:121-5047-00

Disconnect the OPTO Transmitter/Receiver Board from the circuit. Connect one side of a 560 Ω Pull-Up Resistor to Pin-1 of the OPTO Receiver Bd. and the other side of the resistor to a 5v DC source. Connect Pin-2 to GND. Connect a +5v DC source to Pin-1 of the Transmitter & GND to Pin-2. Align with the Receiver OPTO approximately 3” distance. Using you Volt-Meter or an Oscilloscope, monitor Pin-1 while BLOCKING and UNBLOCKING the BEAM from the Trans. The output will be approximately +5v DC when the BEAM IS NOT BLOCKED and approximately 0v when the BEAM IS BLOCKED.

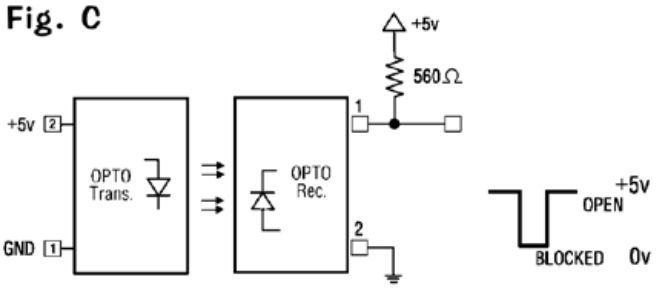

TROUGH DUAL OPTO BOARDS ALIGNMENT/TEST FOR LED1

When a working OPTO is installed and connected in a game, the transmitter should light (LED1 lower & LED2 upper) when the power is switched on. With the playfield in Service Position #1 (playfield lifted up in the half-way position resting on the prop rod or edge slide support brackets) and the game on, the LED lights should show up as BRIGHT RED RINGS through the back of the Reciever Board around the Recievers LED1 & LED2 (see Fig.1). Testing only LED1: With the game in Switch Test Mode, lifting the Trough Plunger with a fingertip should block the BEAM and cause the Switch Position to trigger (see Fig. 2). View Fig. 2a & 2b (on the next page) for a sectional view of the Light Path (note alignment) and what happens as a ball breaks the light beam.

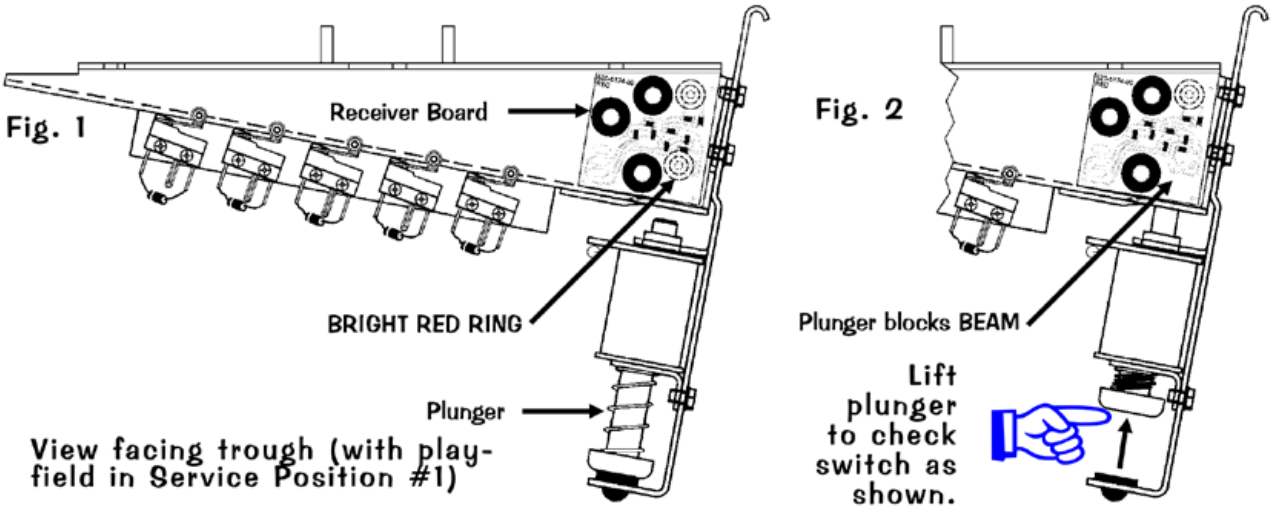

SECTIONAL VIEW FROM RIGHT (FIG. 2A & 2B)

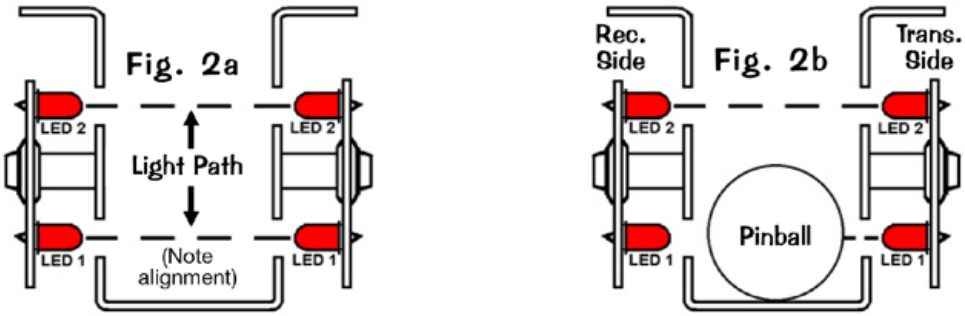

TROUGH DUAL OPTO BOARDS ALIGNMENT/TEST FOR LED2

When a working OPTO is installed and connected in a game, the transmitter should light (LED1 lower & LED2 upper) when the power is switched on. With the playfield in Service Position #1 (playfield lifted up and resting on the Playfield Support Slide Brackets) and the game on, the LED lights should show up as BRIGHT RED RINGS through the back of the Receiver Board around the Receivers LED1 & LED2 (see Fig. 1, previous page). Testing only LED2: TO PERFORM THIS TEST, A PINBALL MUST BE IN THE BALL TROUGH. With the game in Switch Test Mode, lifting the Trough Plunger with a finger tip should block the BEAM on LED2 and cause the Switch Position to trigger (see Fig. 3). View Fig. 3a & 3b for a sectional view of the Light Path (note alignment) and what happens as a "double stacked" ball scenario breaks the light beam.

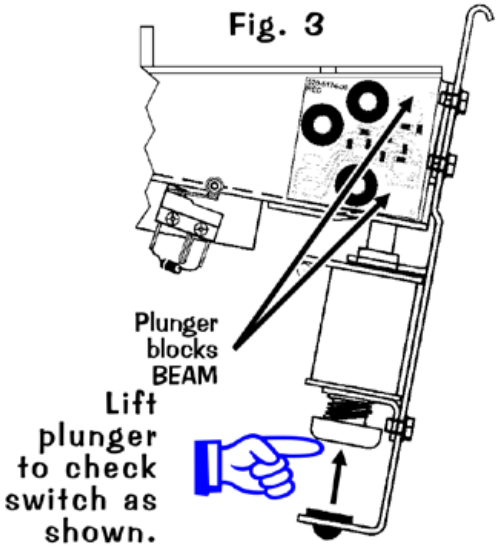

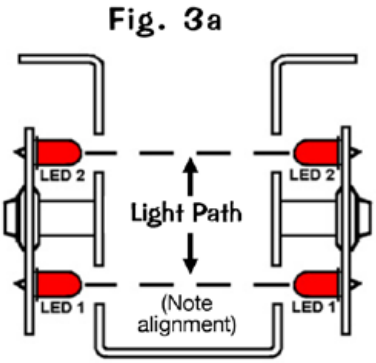

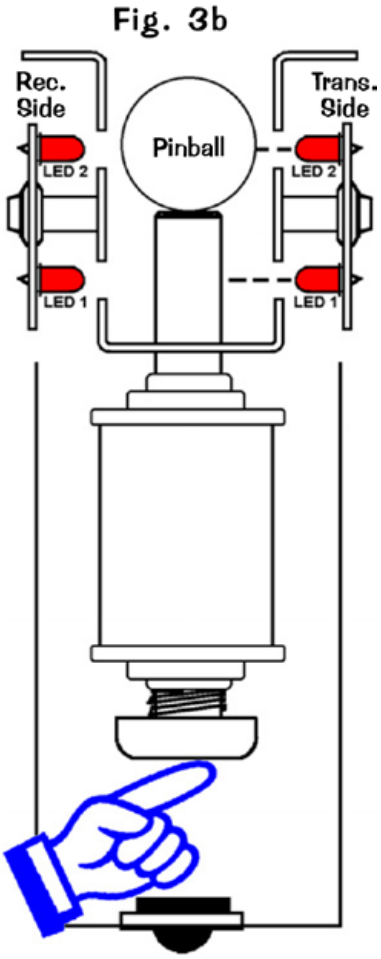

IMPORTANT

If replacement of LED is required, insure that it is mounted correctly before and after soldering (See Fig. 4a/4b).

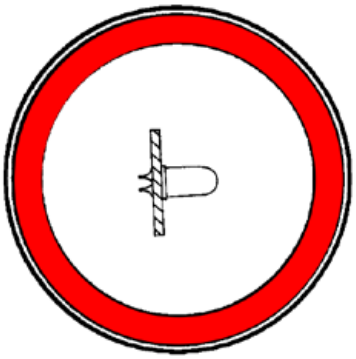

Fig. 4a
Correct Position

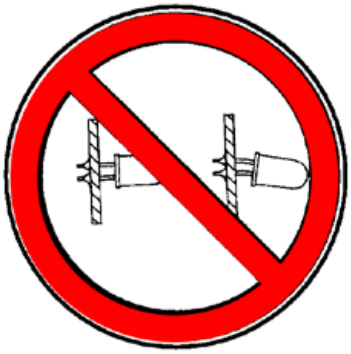

Fig. 4b
Incorrect Position

I/O POWER DRIVER PCB S.A.M. SYSTEM SCHEMATIC (SHEET 1 OF 4)

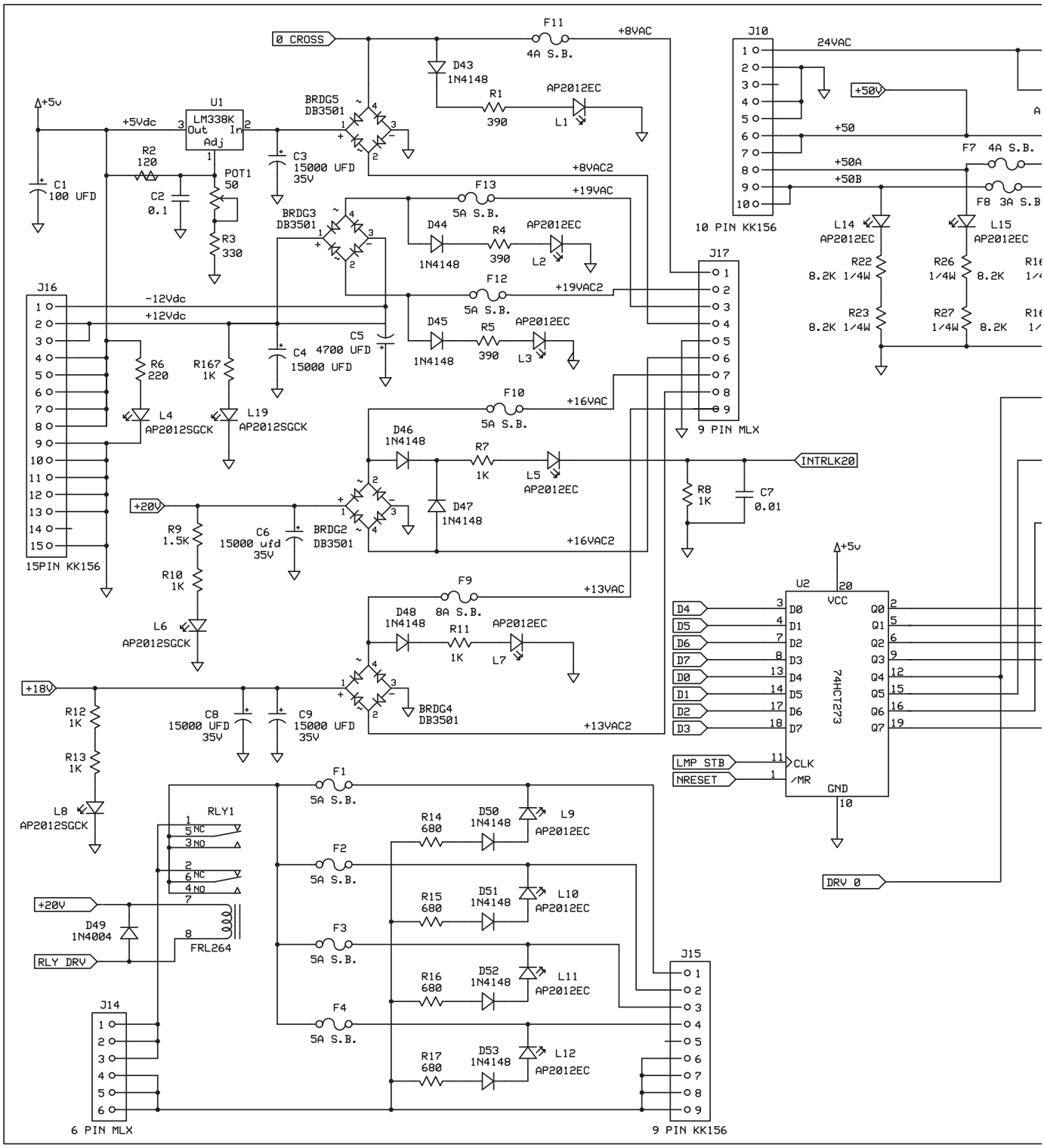

I/O POWER DRIVER PCB S.A.M. SYSTEM SCHEMATIC (SHEET 1 OF 4)

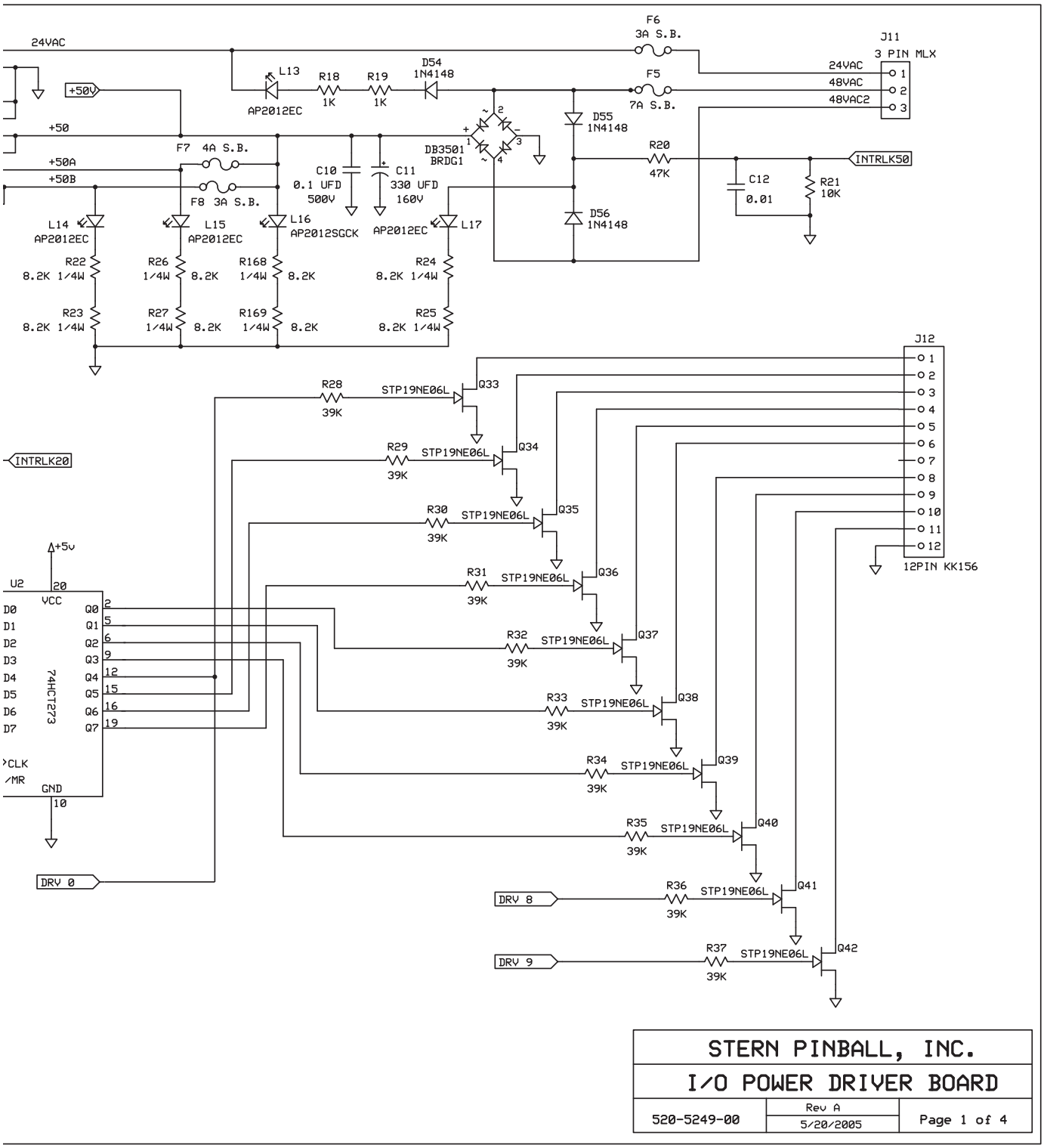

I/O POWER DRIVER PCB S.A.M. SYSTEM SCHEMATIC (SHEET 2 OF 4)

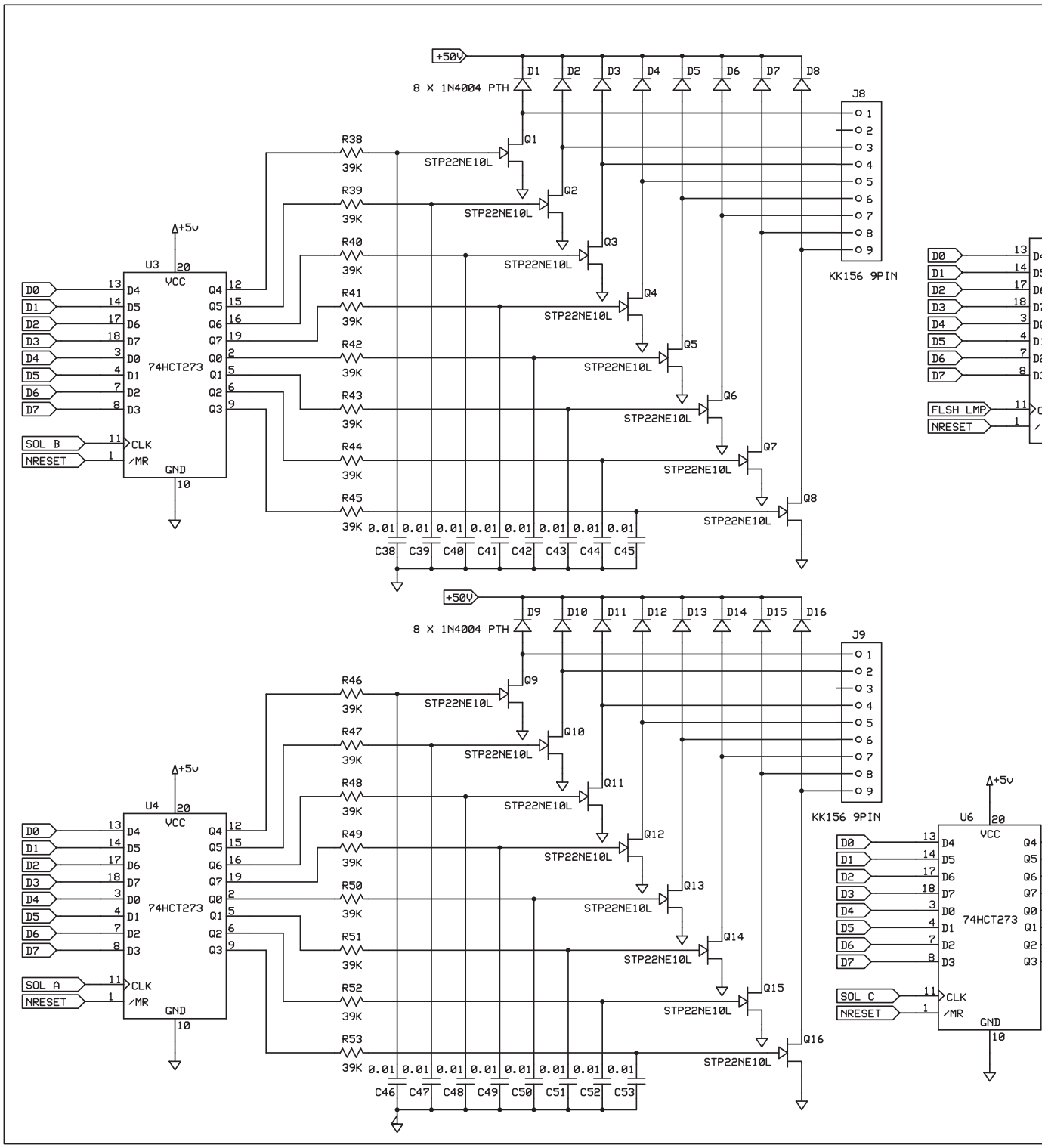

I/O POWER DRIVER PCB S.A.M. SYSTEM SCHEMATIC (SHEET 2 OF 4)

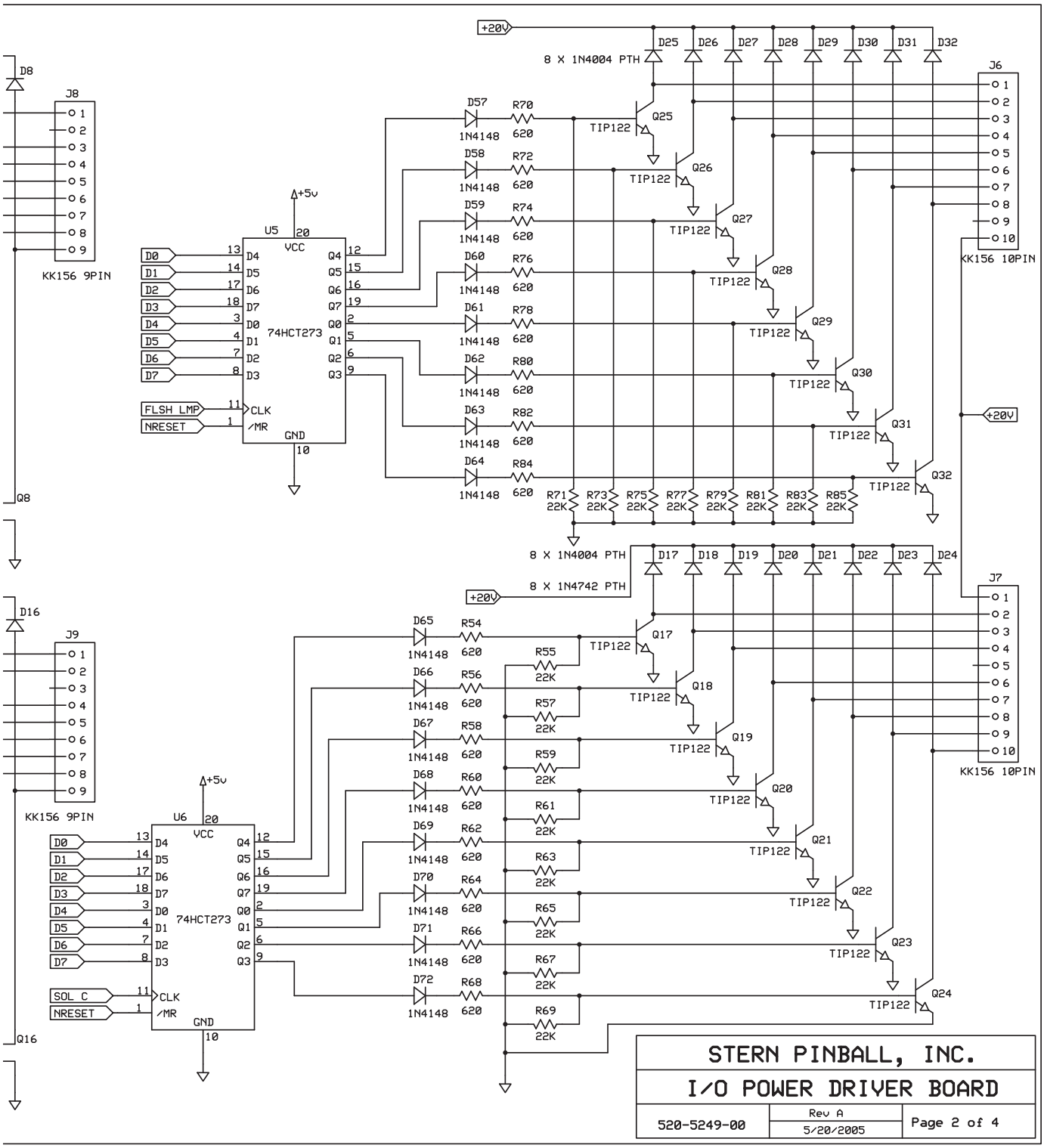

I/O POWER DRIVER PCB S.A.M. SYSTEM SCHEMATIC (SHEET 3 OF 4)

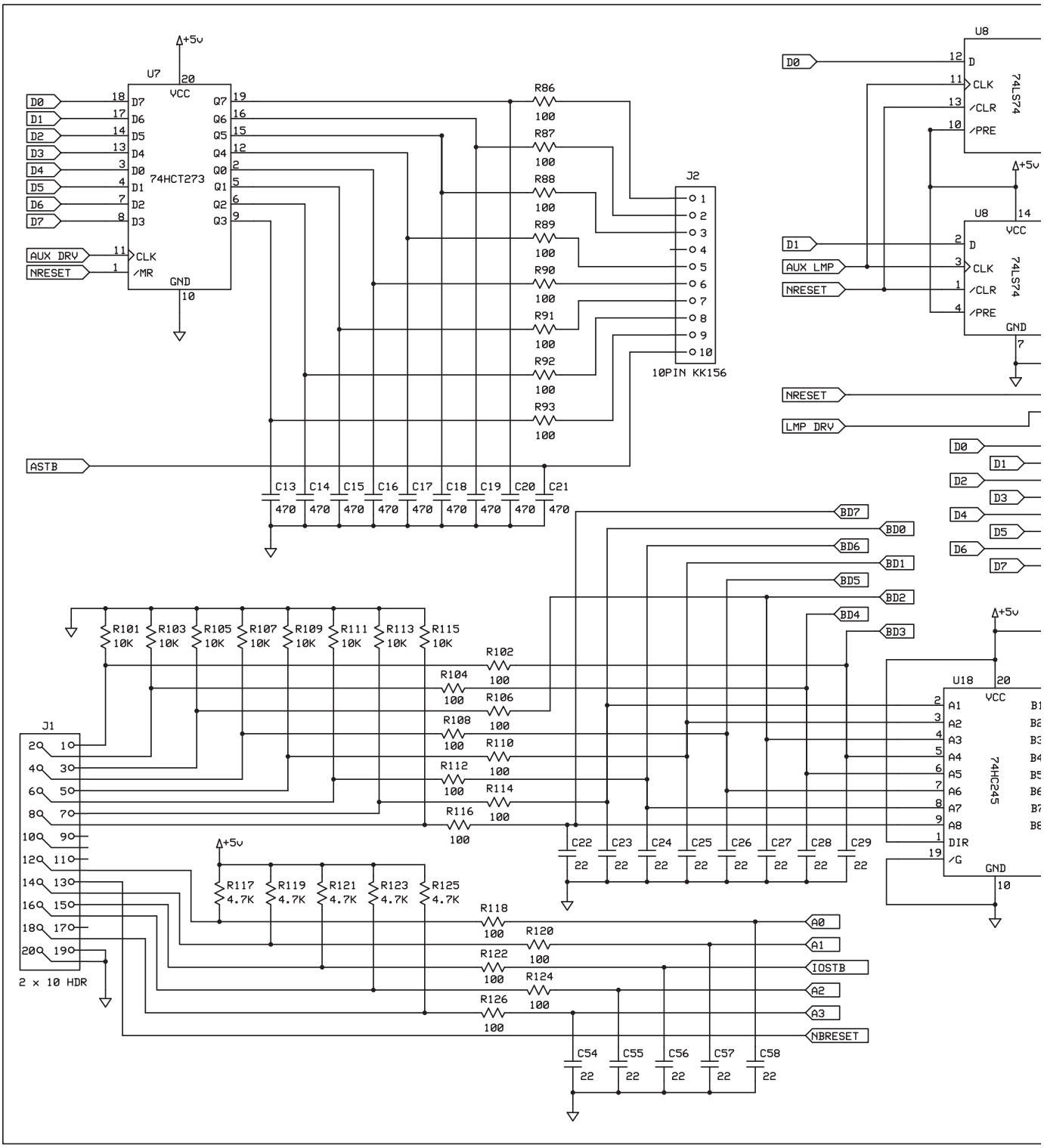

I/O POWER DRIVER PCB S.A.M. SYSTEM SCHEMATIC (SHEET 3 OF 4)

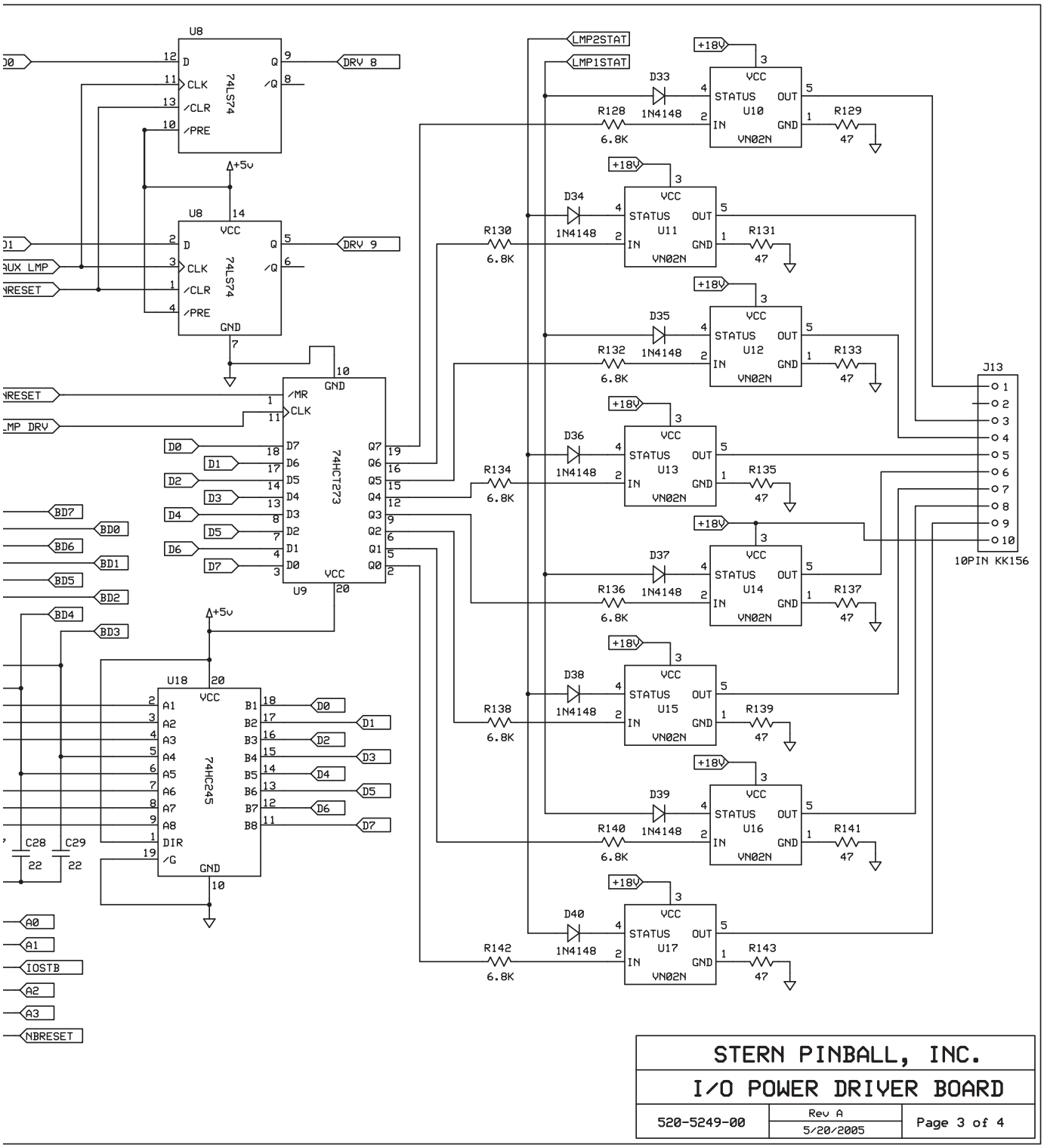

I/O POWER DRIVER PCB S.A.M. SYSTEM SCHEMATIC (SHEET 4 OF 4)

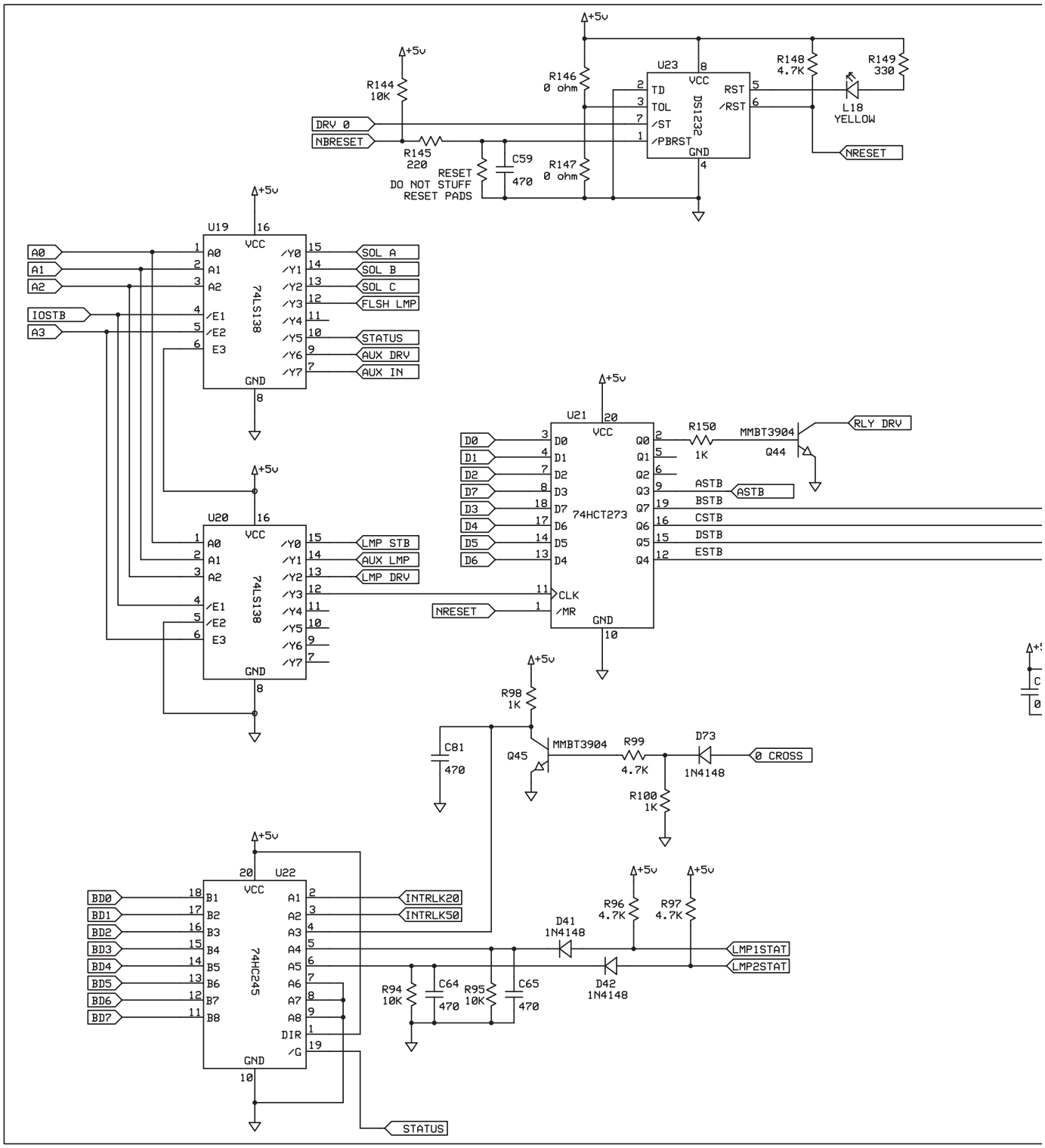

I/O POWER DRIVER PCB S.A.M. SYSTEM SCHEMATIC (SHEET 4 OF 4)

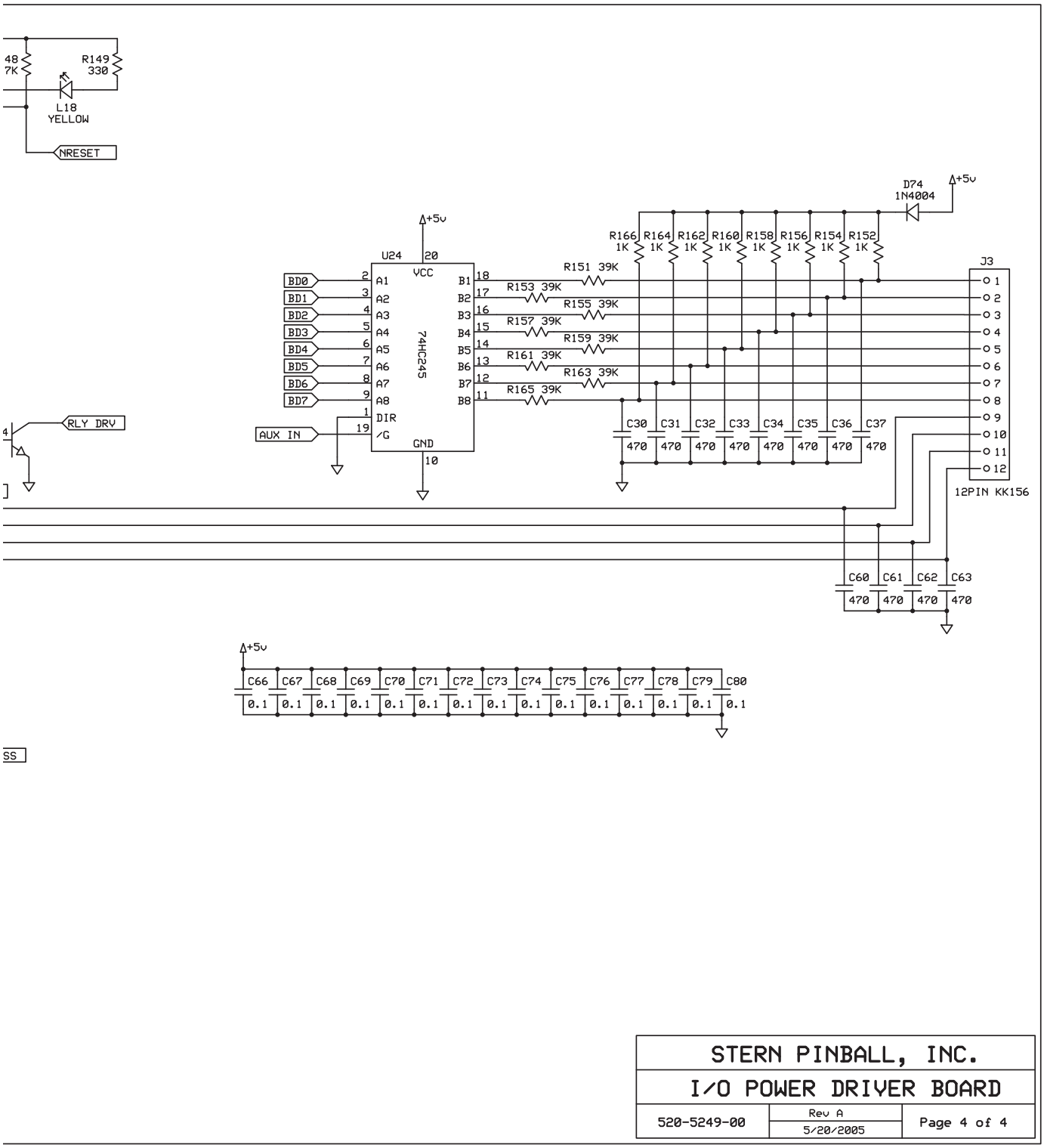

I/O POWER DRIVER PCB S.A.M. SYSTEM COMPONENT LAYOUT

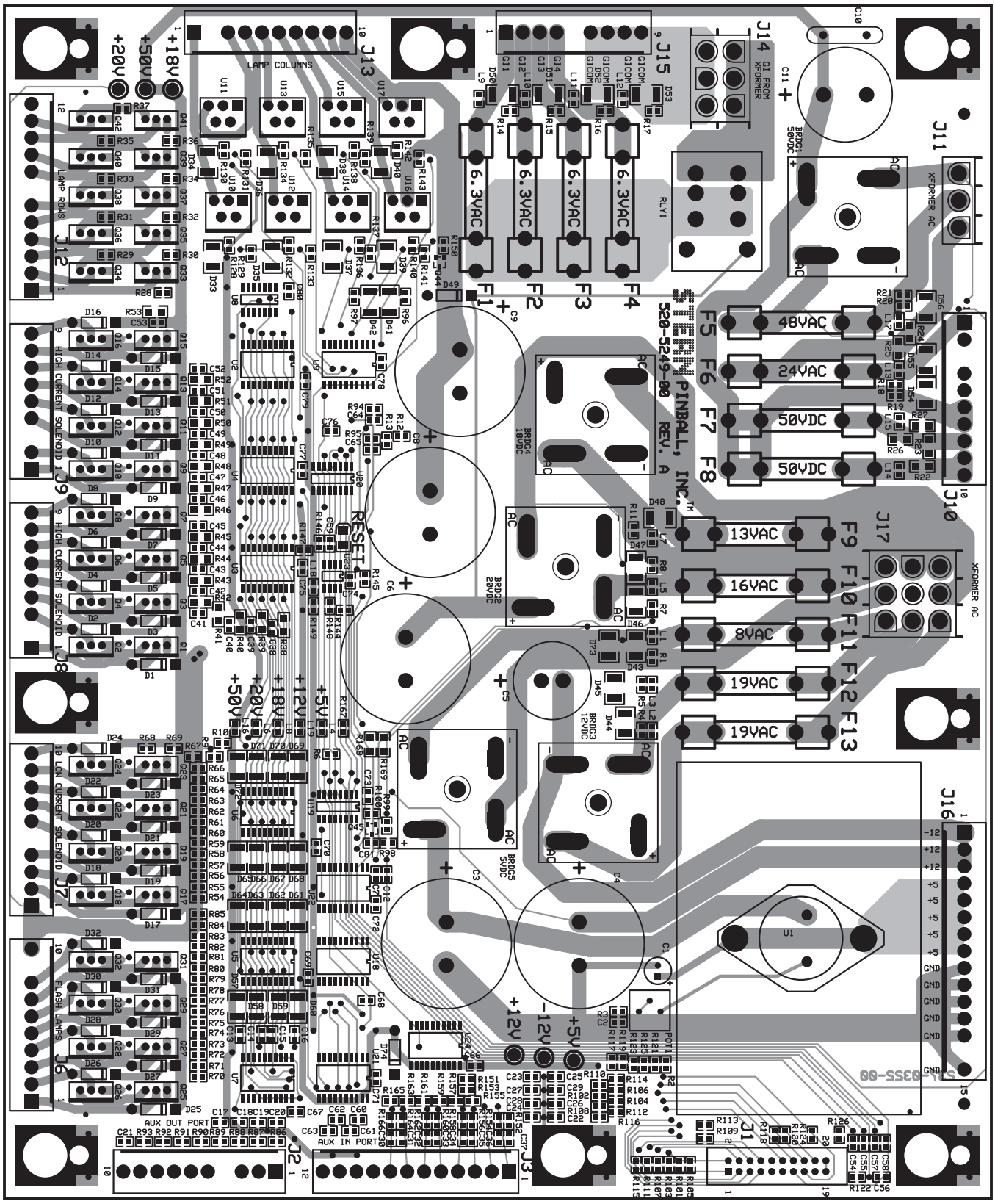

I/O POWER DRIVER PCB S.A.M. SYSTEM PARTS

Item	Qty	SPI Part Number	(MFG P.N.)	Ref-Designator	Description
-	1	520-5249-00		I/O Power Driver PCB (S.A.M. System), Rev. A	(Includes Items 1-67)
1	1	121-6001-00	(101-0001807)	R9	Resistor SM 0805 Film 1.5KΩ 1/10W 5%
2	22	121-6002-00	(101-0001820)	R86, R87, R88, R90, R91, R92, R93, R102, R104, R106, R108, R110, R112, R114, R116, R118, R120, R122, R124, R126, R146	Resistor SM 0805 Film 100Ω 1/10W 5%
3	12	121-6020-00	(101-0001827)	R21, R94, R95, R101, R103, R105, R107, R109, R111, R113, R115, R144	Resistor SM 0805 Film 10KΩ 1/10W 5%
4	1	121-6003-00	(101-0001845)	R2	Resistor SM 0805 Film 120Ω 1/10W 5%
5	20	121-6022-00	(101-0001905)	R7, R8, R10, R11, R12, R13, R18, R19, R98, R100, R150, R152, R154, R156, R158, R160, R162, R164, R166, R167	Resistor SM 0805 Film 1KΩ 1/10W 5%
6	2	121-6004-00	(101-0001943)	R6, R145	Resistor SM 0805 Film 220Ω 1/10W 5%
7	16	121-6005-00	(101-0001849)	R55, R57, R59, R61, R63, R65, R67, R69, R71, R73, R75, R77, R79, R81, R83, R85	Resistor SM 0805 Film 22KΩ 1/10W 5%
8	2	121-6006-00	(101-0002012)	R3, R149	Resistor SM 0805 Film 330Ω 1/10W 5%
9	3	121-6007-00	(101-0002031)	R1, R4, R5	Resistor SM 0805 Film 390Ω 1/10W 5%
10	8	121-6013-00	(101-0002035)	R151, R153, R155, R157, R159, R161, R163, R165	Resistor SM 0805 Film 39KΩ 1/10W 5%
11	9	121-6008-00	(101-0002046)	R96, R97, R99, R117, R119, R121, R123, R125, R148	Resistor SM 0805 Film 4.7KΩ 1/10W 5%
12	8	121-6014-00	(101-0002065)	R129, R131, R133, R135, R137, R139, R141, R143	Resistor SM 0805 Film 47Ω 1/10W 5%
13	1	121-6015-00	(101-0002071)	R20	Resistor SM 0805 Film 47KΩ 1/10W 5%
14	8	121-6009-00	(101-0002108)	R128, R130, R132, R134, R136, R138, R140, R142	Resistor SM 0805 Film 6.8KΩ 1/10W 5%
15	16	121-6010-00	(101-0002116)	R54, R56, R58, R60, R62, R64, R66, R68, R70, R72, R74, R76, R78, R80, R82, R84	Resistor SM 0805 Film 620Ω 1/10W 5%
16	4	121-6016-00	(101-0002126)	R14, R15, R16, R17	Resistor SM 0805 Film 680Ω 1/10W 5%
17	10	121-6011-00	(101-002296)	R28, R29, R30, R31, R32, R33, R34, R35, R36, R37	Resistor SM 1206 Film 22KΩ 1/10W 5%
18	8	121-6012-00	(101-0002473)	R22, R23, R24, R25, R26, R27, R168, R169	Resistor SM 1206 Film 8.2KΩ 1/10W 5%
19	16	121-6013-00	(101-0002378)	R38, R39, R40, R41, R42, R43, R44, R45, R46, R47, R48, R49, R50, R51, R52, R53	Resistor SM 1206 Film 39KΩ 1/10W 5%
20	16	125-6001-00	(121-0000056)	C2, C66, C67, C68, C69, C70, C71, C72, C73, C74, C75, C76, C77, C78, C79, C80	Capacitor SM 0805 Cer. .1UF 50V 10% X7R
21	25	125-6002-00	(121-0000096)	C13, C14, C15, C16, C17, C18, C19, C20, C21, C30 ,C31, C32, C33, C34, C35, C36, C37, C59, C60, C61, C62, C63, C64, C65, C81	Capacitor SM 0805 Cer. 470PF 50V 5% NPO
22	18	125-6003-00	(121-0004236)	C7, C12, C38, C39, C40, C41, C42, C43, C44, C45, C46, C47, C48, C49, C50, C51, C52, C53	Capacitor SM 0805 Cer. .01UF 50V 10% X7R
23	13	125-6004-00	(121-0005318)	C22, C23, C24, C25, C26, C27, C28, C29, C54, C55, C56, C57, C58	Capacitor SM 0805 Cer. 22PF 100V 5% NPO
24	1	125-5032-00	(131-0003773)	C1	Capacitor Tht. Radial Alum. 100UF 25V 20%
25	1	125-5034-00	(131-0003864)	C5	Capacitor Tht. Radial Alum. 4700UF 35V 20%
26	1	125-5029-01	(133-0003741)	C10	Capacitor Tht. Disc Cer. .1UF 500V 20%
27	1	125-6022-00	(134-0003846)	C11	Capacitor Tht. Radial Alum. 330UF 160V 20%
28	5	125-5036-01	(134-0004000)	C3, C4, C6, C8, C9	Cap. Tht. Rad. Al. 15000UF 35V 20% Snap-In
29	34	112-6001-01	(183-0004374)	D1, D2, D3, D4, D5, D6, D7, D8, D9, D10, D11, D12, D13, D14, D15, D16, D17, D18, D19, D20, D21, D22, D23, D24, D25, D26, D27, D28, D29, D30, D31, D32, D49, D74	Diode Tht. DO-41 1N4004 400V 1A
30	5	112-5000-00	(187-0004700)	BRDG1, BRDG2, BRDG3, BRDG4, BRDG5	Bridge Tht. Fullwave 100V 35A MB-35
31	10	110-0088-01	(203-0003591)	Q33, Q34, Q35, Q36, Q37, Q38, Q39, Q40, Q41, Q42	Fet Tht. TO-220 STP20NE06L NFet 60V 20A
32	16	110-0106-00	(203-0003592)	Q1, Q2, Q3, Q4, Q5, Q6, Q7, Q8, Q9, Q10, Q11, Q12, Q13, Q14, Q15, Q16	Fet Tht. TO-220 20N10L NFet 100V 20A
33	8	110-0089-00	(203-0003597)	U10, U11, U12, U13, U14, U15, U16, U17	Fet Tht. PENTAWAT VN02N NFet HighSide 26V 6A
34	2	110-0069-01	(211-0003589)	Q44, Q45	Trans. SM SOT-23 MMST3904 NPN 40V 0.2A
35	16	110-0067-00	(213-0003565)	Q17, Q18, Q19, Q20, Q21, Q22, Q23, Q24, Q25, Q26, Q27, Q28, Q29, Q30, Q31, Q32	Transistor Tht. TO-220 TIP122 NPN 100V 5A
36	3	100-6003-00	(221-0000972)	U18, U22, U24	I.C. SM SOIC 74HC245 Oct. Bus. Xcvr.
37	1	100-6000-00	(221-0011253)	U23	I.C. SM SOIC DS1832S. SO-8

I/O POWER DRIVER PCB S.A.M. SYSTEM PARTS CONTINUED

Item	Qty	SPI Part Number	(MFG P.N.)	Ref-Designator	Description
38	8	100-5056-00	(221-0001287)	U2, U3, U4, U5, U6, U7, U9, U21	I.C. SM SOIC 74HCT273 Oct. D F-F
39	2	100-6001-00	(221-0003728)	U19, U20	I.C. SM SO 74LS138D Hex Inverter; 3-8 DC/ DMX
40	1	100-6002-00	(221-0011135)	U8	I.C. SM SOIC 74LS74AD SOIC-14
41	1	100-0356-00	(225-0003582)	U1	I.C. Tht. TO-3 LM338 5A Adjust. Voltage Reg.
42	5	045-	(315-0003427)	J2, J6, J7, J10, J13	Con. Tht. Hdr. 10 Pin, 1 Row .156"
43	1	045-	(315-0006910)	J1	Con. Tht. Hdr. 20 Pin, 2 Row .1"
44	2	045-	(315-0003430)	J3, J12	Con. Tht. Hdr. 12 Pin, 1 Row .156"
45	1	045-	(315-0003432)	J16	Con. Tht. Hdr. 15 Pin, 1 Row .156"
46	1	045-	(315-0003503)	J11	Con. Tht. Pwr. 3 Pin, 1 Row .25"
47	1	045-	(315-0003504)	J14	Con. Tht. Pwr. 6 Pin, 2 Row .25"
48	1	045-	(315-0003505)	J17	Con. Tht. Pwr. 9 Pin, 3 Row .25"
49	3	045-	(315-0003821)	J8, J9, J15	Con. Tht. Hdr. 9 Pin, 1 Row .156"
50	2	200-5000-08	(407-0003117)	F6, F8	Fuse 3 Amp 250V Slo-Blo (Glass, Tht. 3AG)
51	2	200-5000-06	(407-0003118)	F7, F11	Fuse 4 Amp 250V Slo-Blo (Glass, Tht. 3AG)
52	7	200-5000-01	(407-0003119)	F1, F2, F3, F4, F10, F12, F13	Fuse 5 Amp 250V Slo-Blo (Glass, Tht. 3AG)
53	1	200-5000-03	(407-0003121)	F5	Fuse 7 Amp 250V Slo-Blo (Glass, Tht. 3AG)
54	1	200-5000-05	(407-0003122)	F9	Fuse 8 Amp 250V Slo-Blo (GLass, Th. 3AG)
55	1	121-5039-00	(415-0004788)	POT1	Potiento THT 50Ω Single Top Adjust. Trimr.
56	1	165-6000-00	(425-0006913)	L18	LED SM Yellow 0805 LED
57	5	165-6001-00	(425-0007753)	L4, L6, L8, L16, L19	LED SM Green Ultrabright Top
58	13	165-6002-00	(425-0007755)	L1, L2, L3, L5, L7, L9, L10, L11, L12, L15, L17	LED SM Red Ultrabirght Top 0805 LED
59	1	190-5002-00	(448-0004778)	RLY1	Relay Tht. GW DPDT10A DC24 2400VA PC MNT
60	1	127-5001-00	(461-0003520)	for BRDG 4, BRDG 5	Heatsink, Sq. Finned Ba TO-220 Avid 531102
61	1	127-5001-02	(461-0003534)	for U1	Heatsink All Large Finned Alum. TO-3
62	1	127-5001-04	(579103B00000G)	for U1 on TO-3 LM338 5A Adj. Volt. Reg.	Heatsink, Circular Finned (Mfg. Aavid)
63	4	240-5008-00	(503-0004469)	2 pcs. for U1 1pc. each for BRDG 4 & 5	#6-32 Keps Nut
64	26	205-0004-00	(503-0004667)	2 pcs. each for F1 - F13	Fuseclip with End Stops (+Ears)
65	4	237-5504-00	(504-0004610)	2 pcs. for U1 1 pc. each for BRDG 4 & 5	#6-32 X 3/4" PPH MS (Zinc) Screw
66	2	254-5007-02	(507-0004544)	for BRDG 4 & 5 (Mfg. .169" I.D. X 9/32" O.D. X 1/4")	1/4" Slf. Rtn. Spacer White
67	5	254-5007-05	(507-0004547)	for BRDG 1, 2, & 3 and for Mounting Holes	5/16" Slf. Rtn. Spacer White

CPU/SOUND PCB S.A.M. SYSTEM SCHEMATIC (SHEET 1 OF 5)

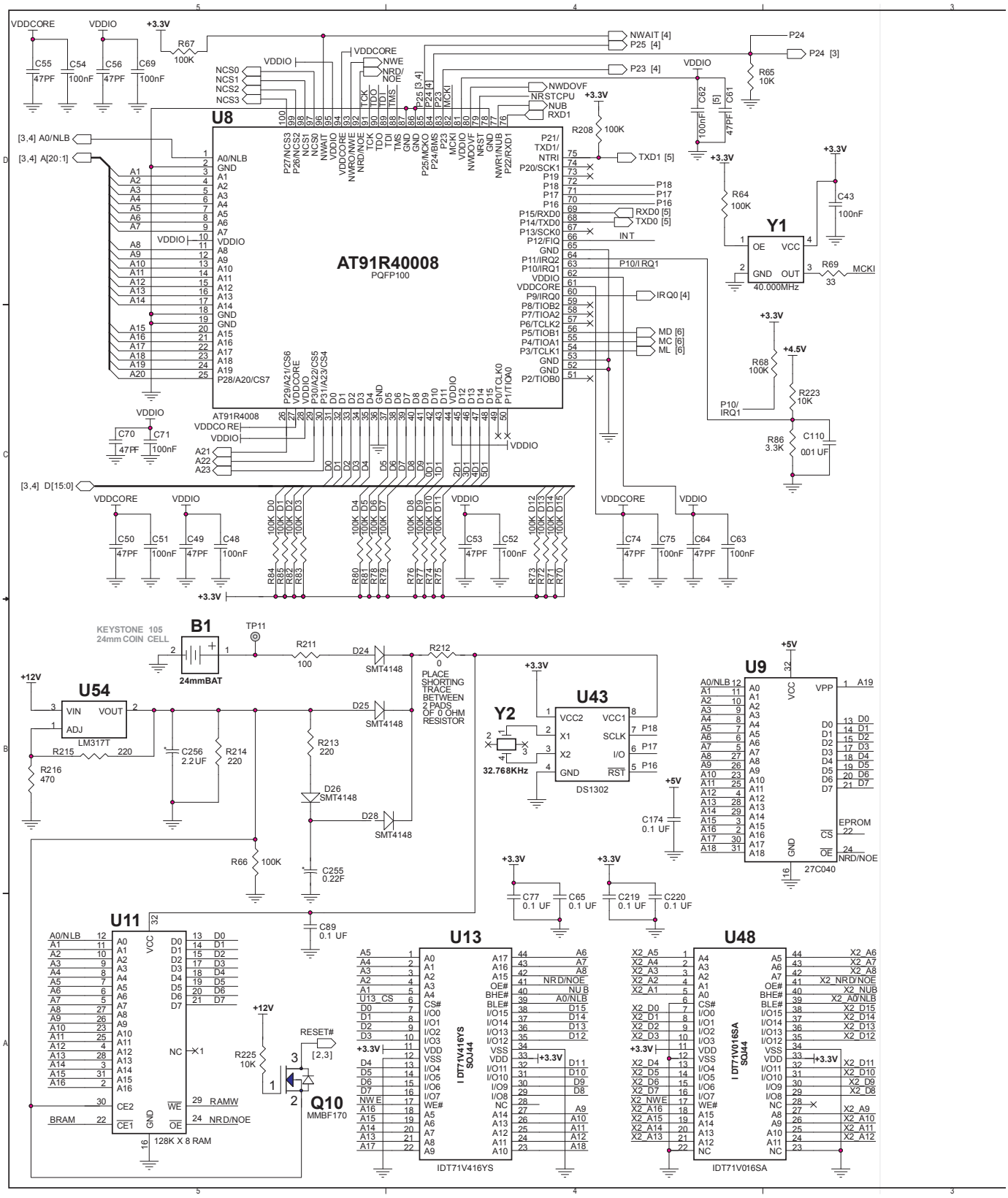

CPU/SOUND PCB S.A.M. SYSTEM SCHEMATIC (SHEET 1 OF 5)

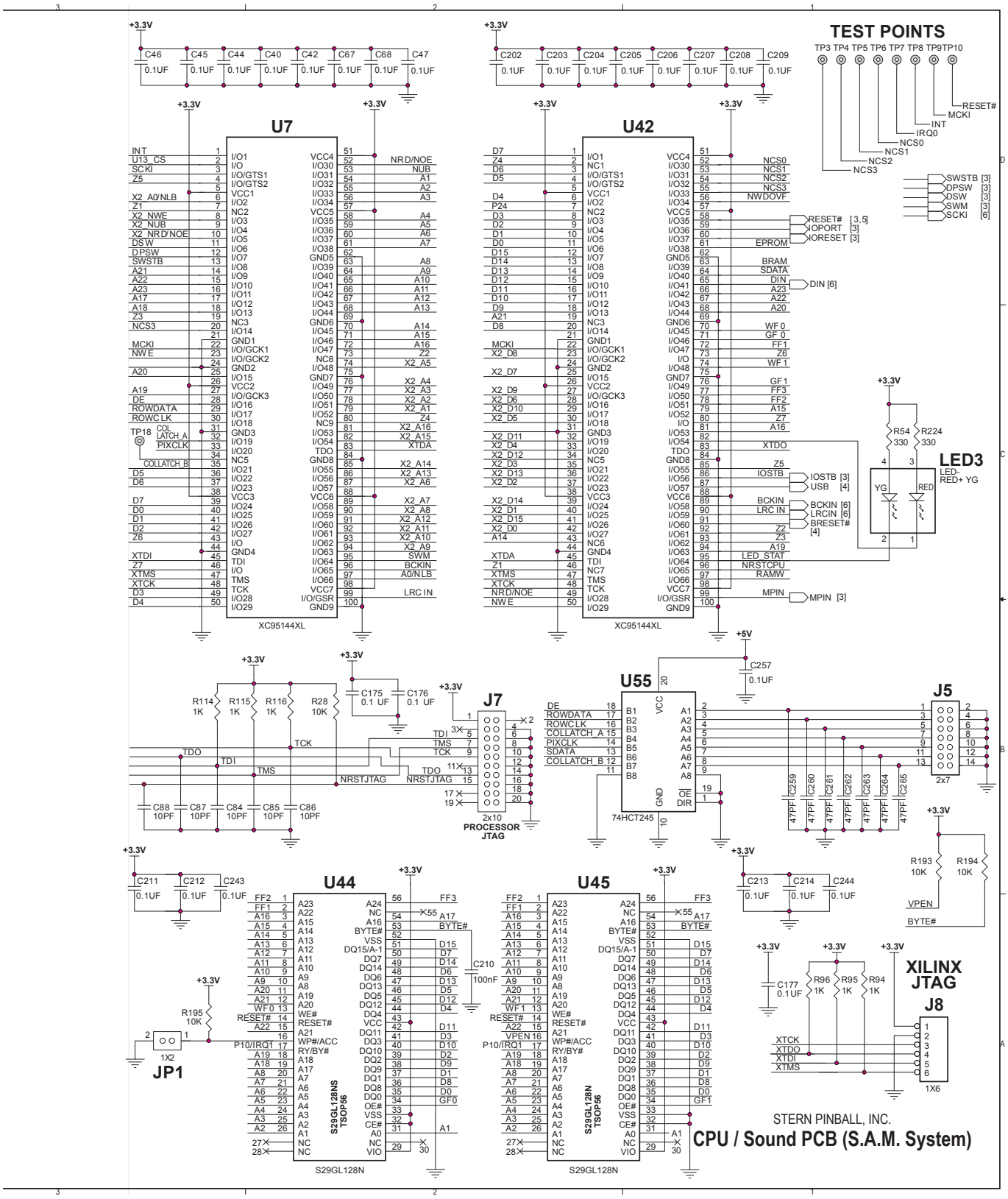

CPU/SOUND PCB S.A.M. SYSTEM SCHEMATIC (SHEET 2 OF 5)

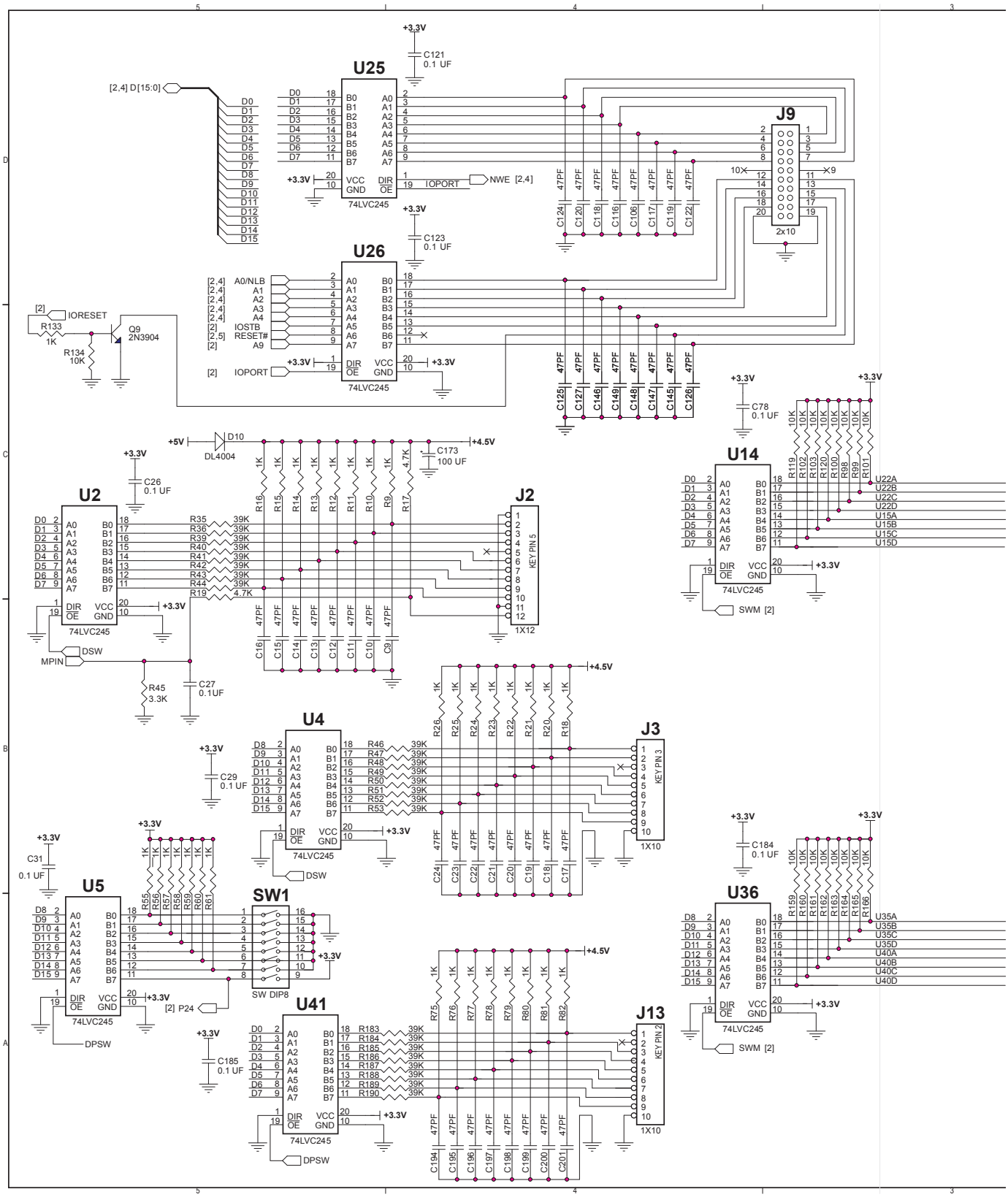

CPU/SOUND PCB S.A.M. SYSTEM SCHEMATIC (SHEET 2 OF 5)

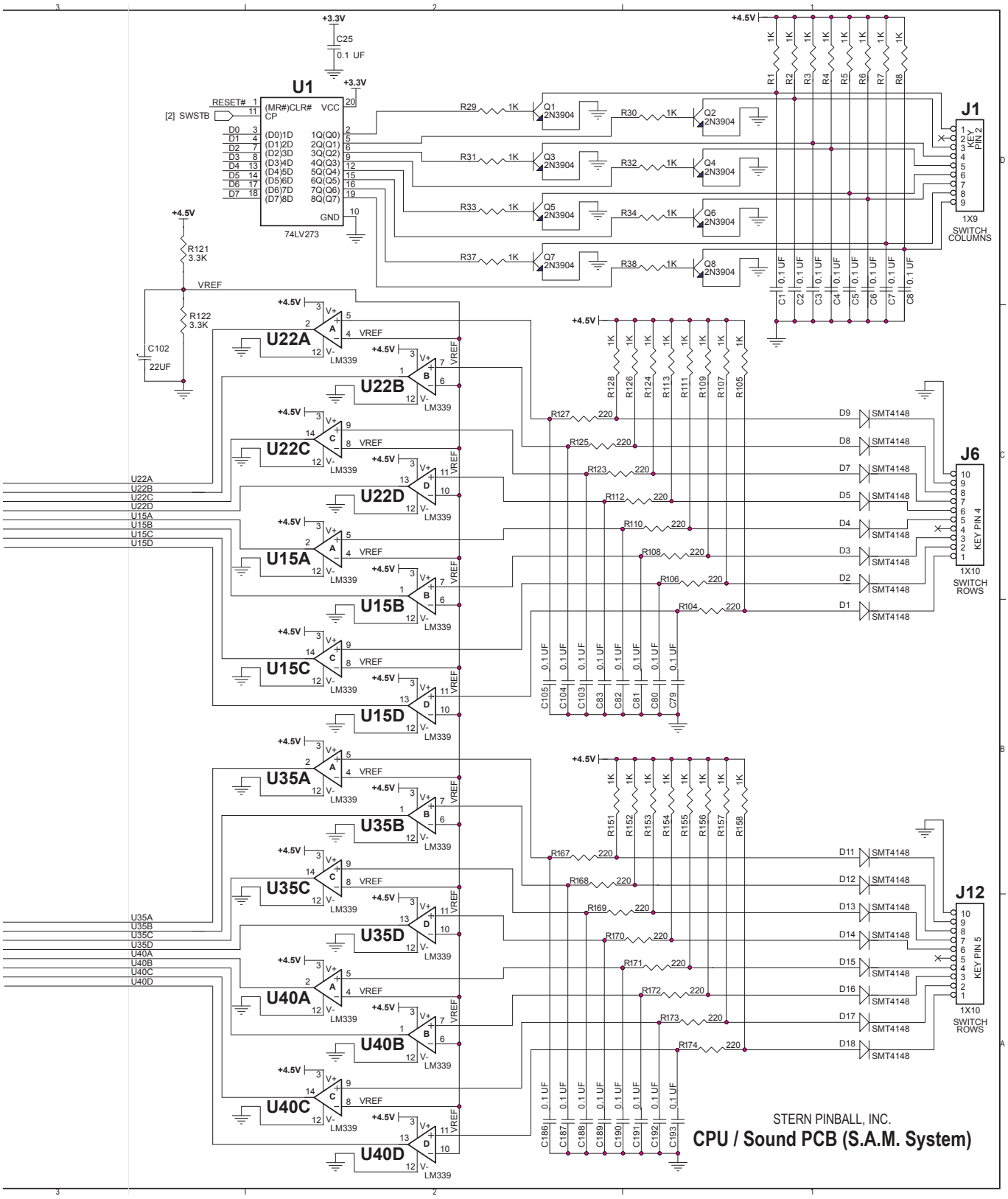

CPU/SOUND PCB S.A.M. SYSTEM SCHEMATIC (SHEET 3 OF 5)

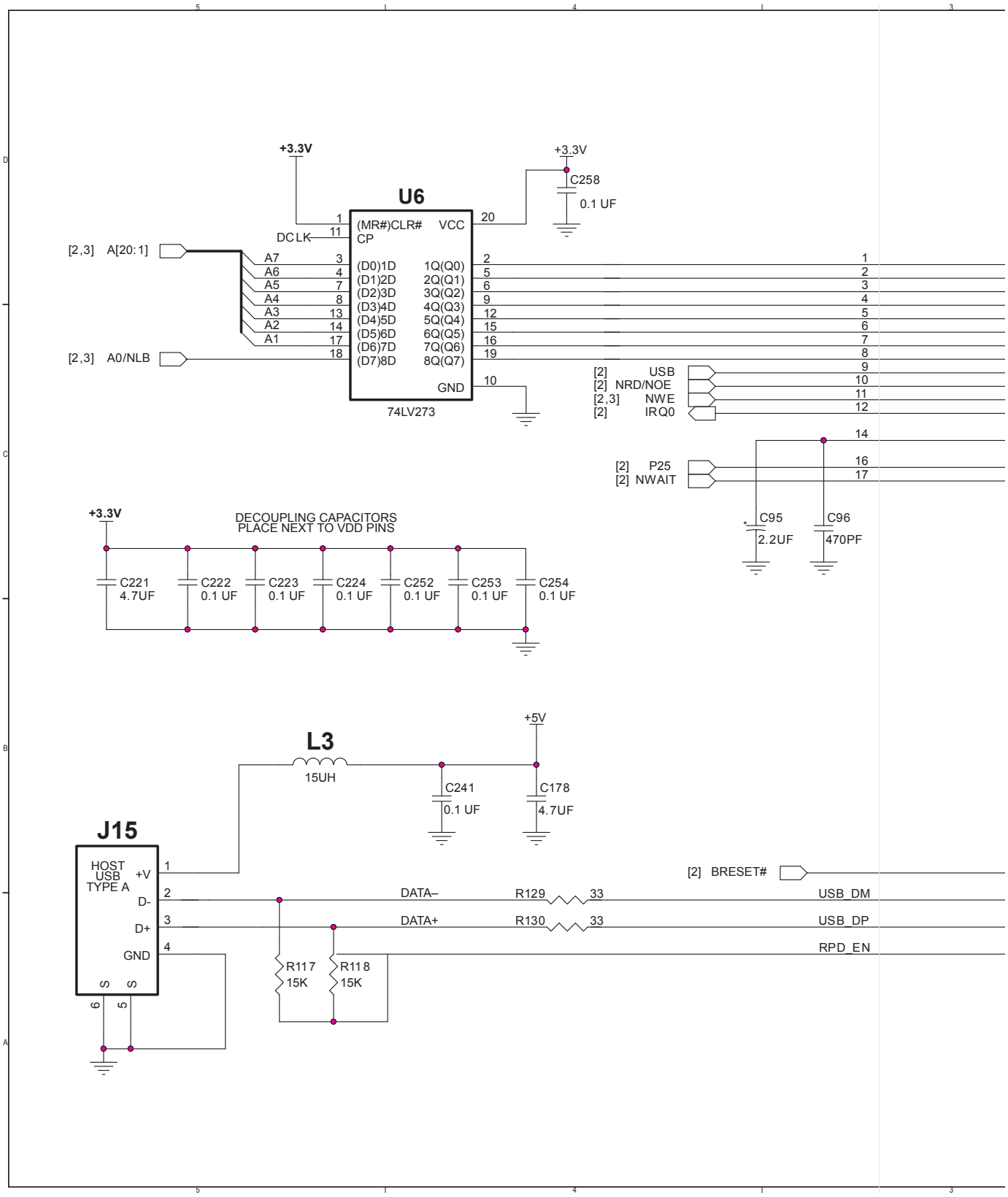

CPU/SOUND PCB S.A.M. SYSTEM SCHEMATIC (SHEET 3 OF 5)

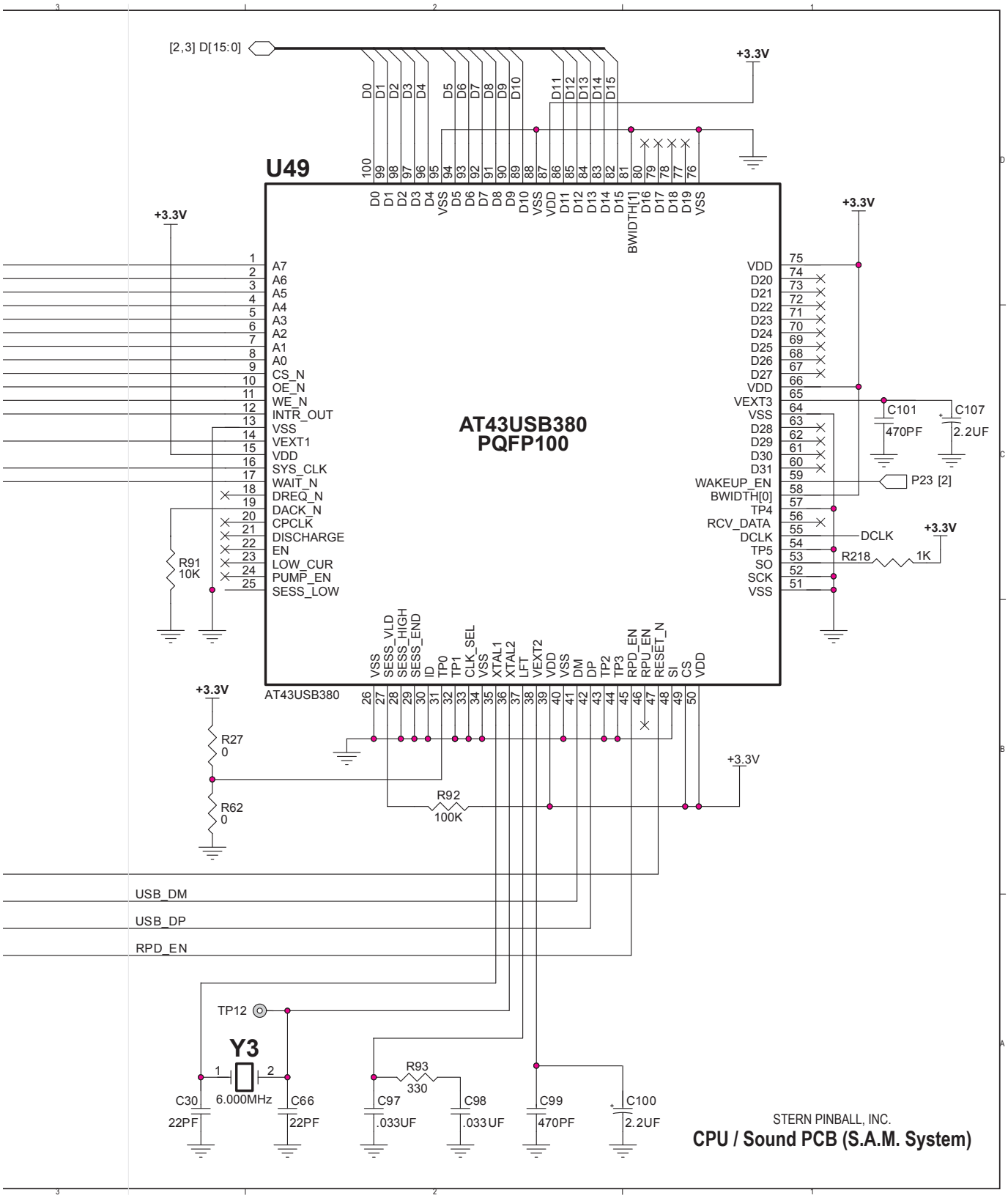

CPU/SOUND PCB S.A.M. SYSTEM SCHEMATIC (SHEET 4 OF 5)

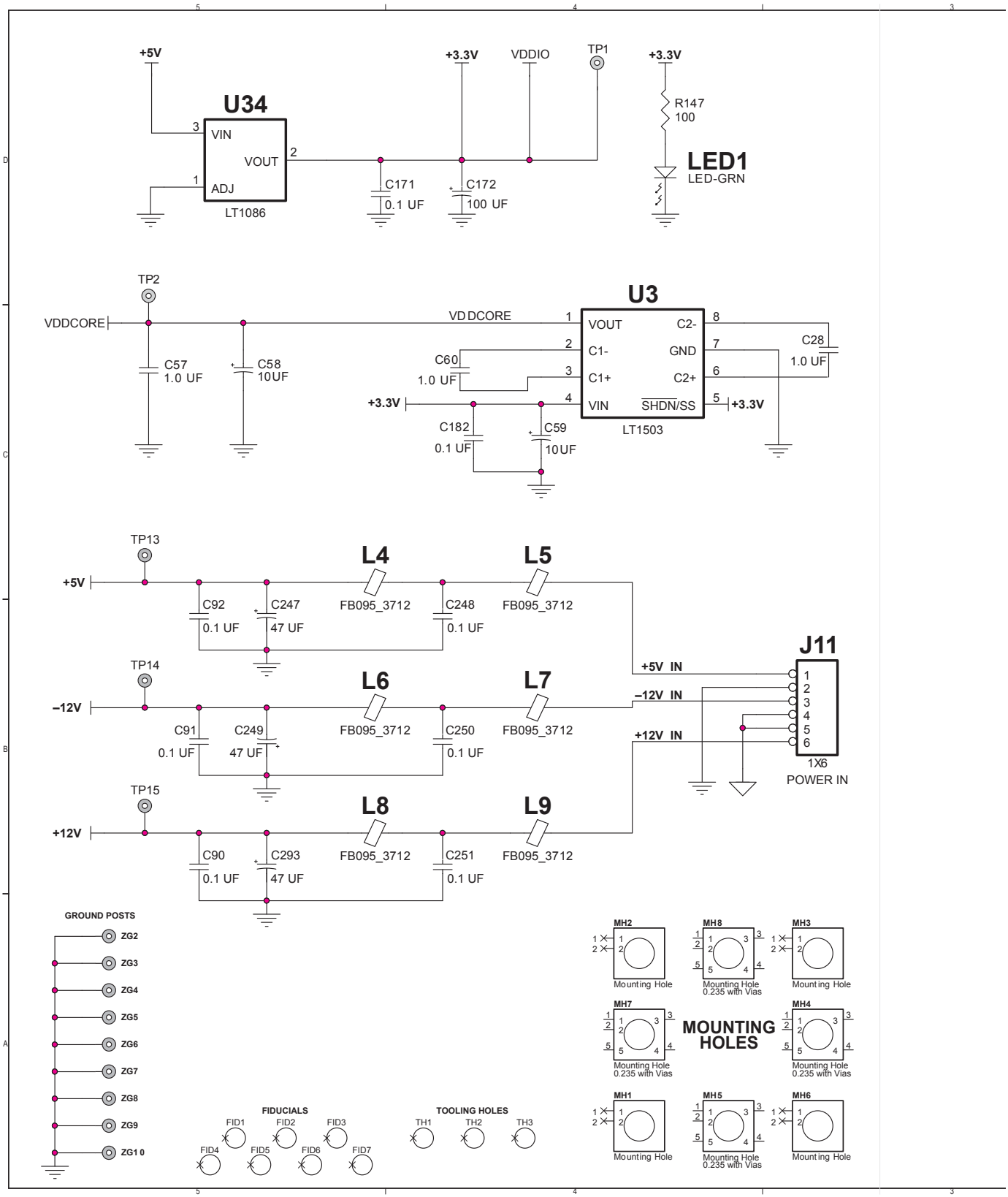

CPU/SOUND PCB S.A.M. SYSTEM SCHEMATIC (SHEET 4 OF 5)

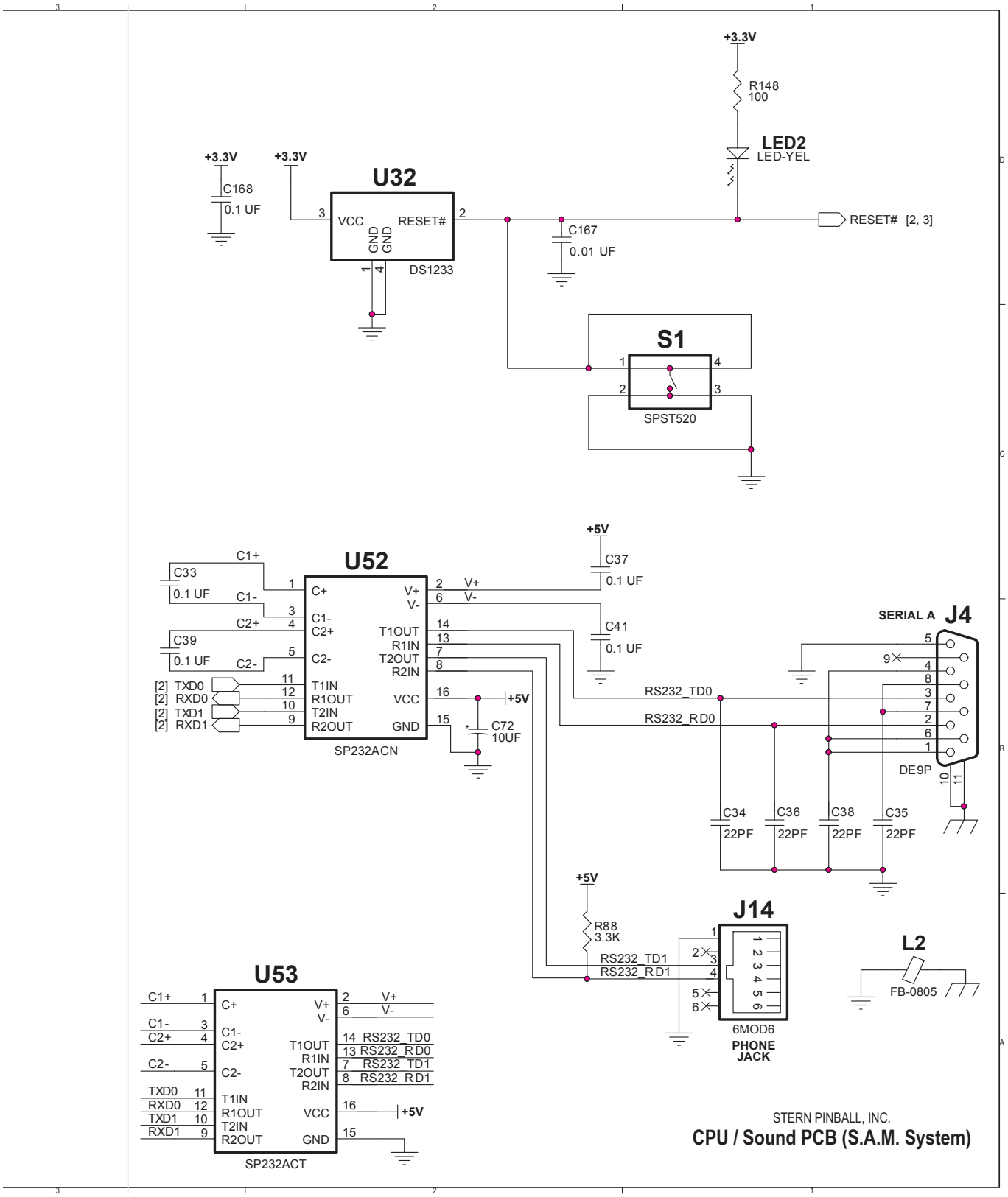

CPU/SOUND PCB S.A.M. SYSTEM SCHEMATIC (SHEET 5 OF 5)

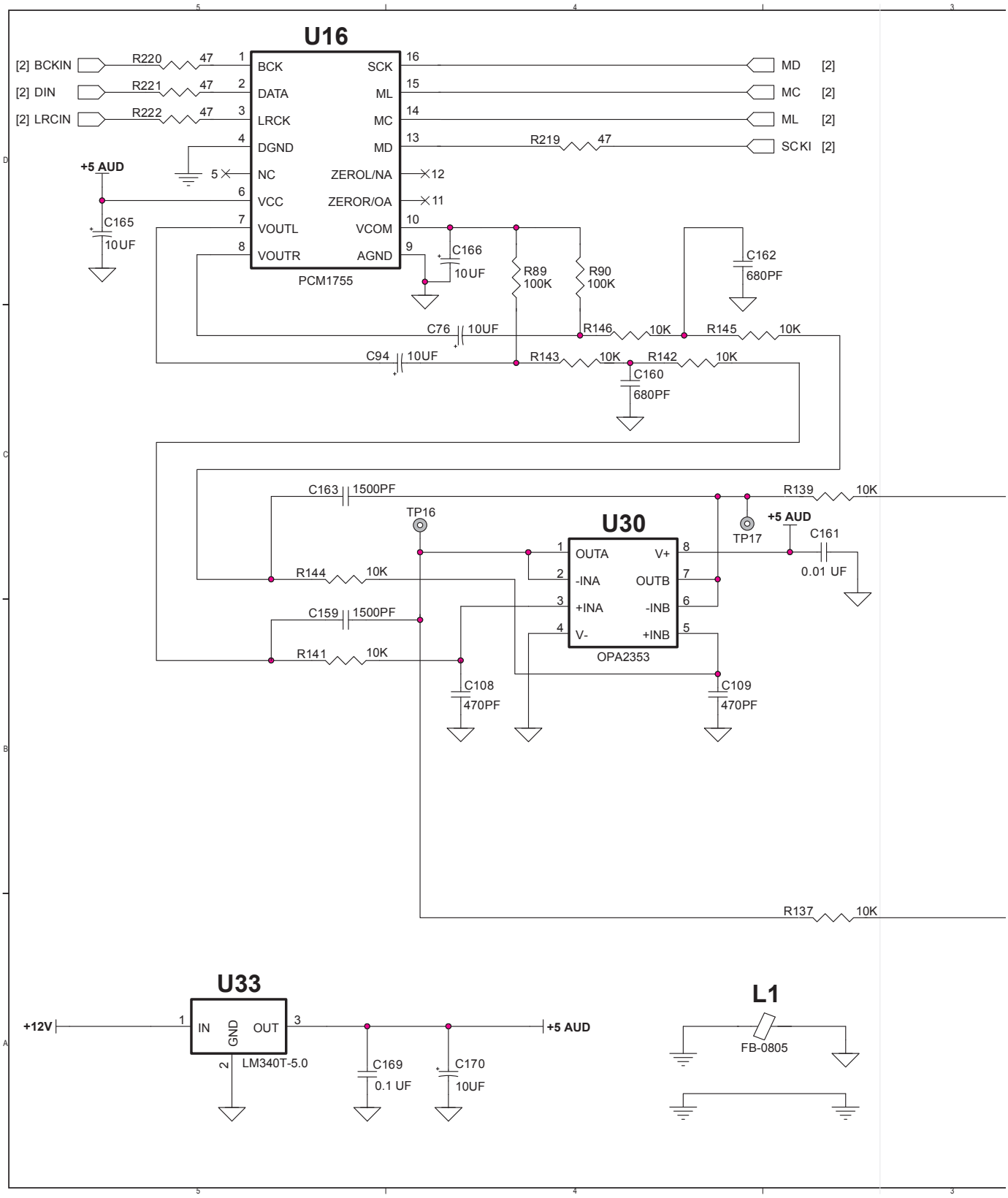

CPU/SOUND PCB S.A.M. SYSTEM SCHEMATIC (SHEET 5 OF 5)

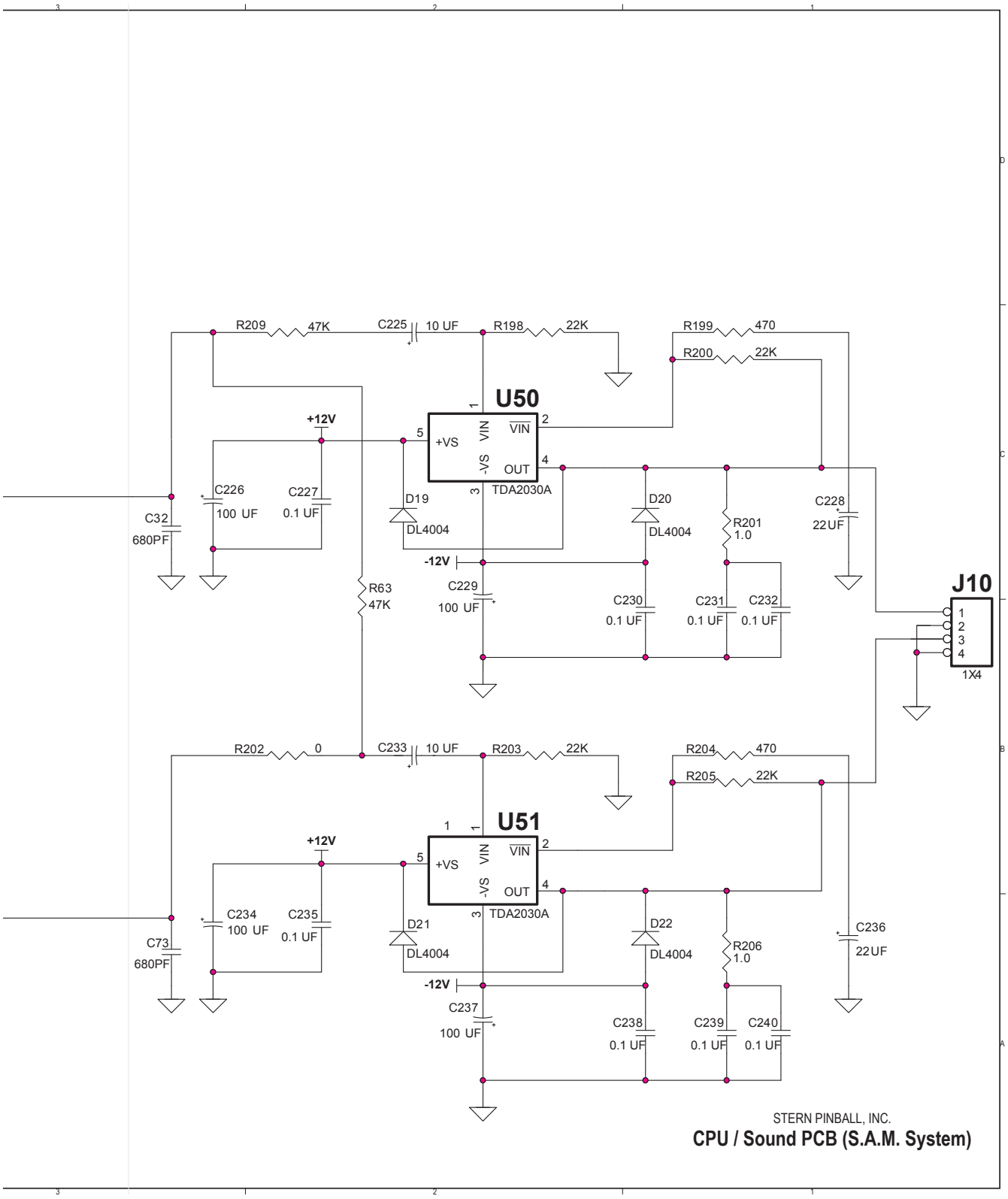

CPU/SOUND PCB S.A.M. SYSTEM COMPONENT LAYOUT

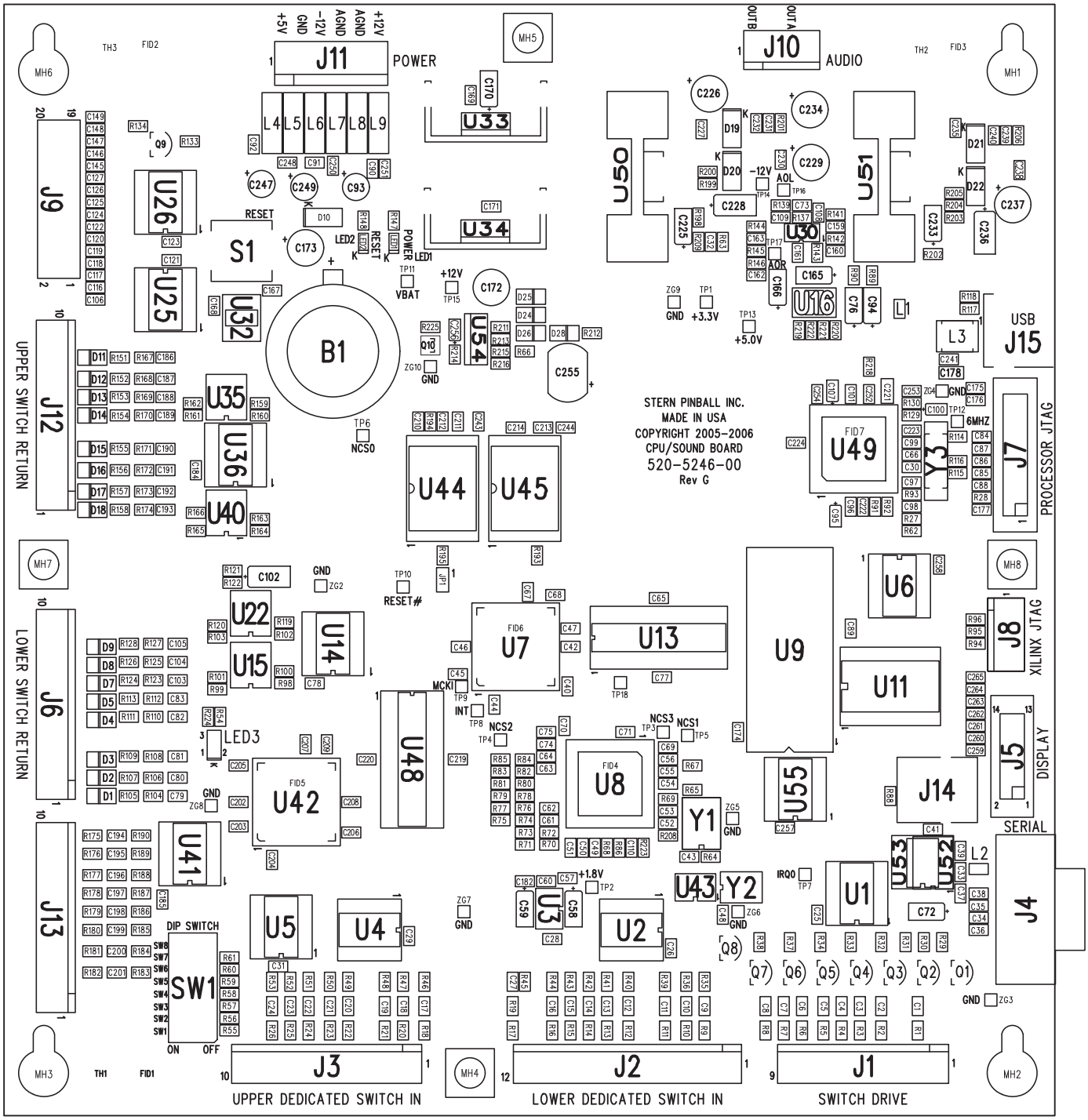

CPU/SOUND PCB S.A.M. SYSTEM COMPONENT PARTS

Item	Qty	SPI Part Number	(MFG. P.N.)	Ref-Designator	Description (SM = Surface Mount)
-	1	520-5246-00		CPU/Sound PCB (S.A.M. System), Rev. G	(Includes Items 1-90)
1	3	121-6017-00	(101-0001790)	R27, R202, R212	Resistor SM 0805 0.0Ω 1/10W 5%
2	2	121-6108-00	(101-0001792)	R201, R206	Resistor SM 0805 1.0Ω 1/10W 5%
3	24	121-6001-00	(101-0001807)	R9, R10, R11, R12, R13, R14, R15, R16, R18, R20, R21, R22, R23, R24, R25, R26, R175, R176, R177, R178, R179, R180, R181, R182	Resistor SM 0805 1.5KΩ 1/10W 5%
4	3	121-6002-00	(101-0001820)	R147, R148, R211	Resistor SM 0805 Film 100Ω 1/10W 5%
5	24	121-6019-00	(101-0001823)	R64, R66, R67, R68, R70, R71, R72, R73, R74, R75, R76, R77, R78, R79, R80, R81, R82, R83, R84, R85, R89, R90, R92, R208	Resistor SM 0805 100KΩ 1/10W 5%
6	33	121-6020-00	(101-0001827)	R28, R65, R91, R98, R99, R100, R101, R102, R103, R119, R120, R134, R137, R139, R141, R142, R143, R144, R145, R146, R159, R160, R161, R162, R163, R164, R165, R166, R193, R194, R195, R223, R225	Resistor SM 0805 Film 10KΩ 1/10W 5%
7	2	121-6021-00	(101-0001880)	R117, R118	Resistor SM 0805 15KΩ 1/10W 5%
8	47	121-6022-00	(101-0001905)	R1, R2, R3, R4, R5, R6, R7, R8, R29, R30, R31, R32, R33, R34, R37, R38, R55, R56, R57, R58, R59, R60, R61, R94, R95, R96, R105, R107, R109, R111, R113, R114, R115, R116, R124, R126, R128, R133, R151, R152, R153, R154, R155, R156, R157, R158, R218, LED2	Resistor SM 0805 1KΩ 1/10W 5%
9	19	121-6004-00	(101-0001943)	R104, R106, R108, R110, R112, R123, R125, R127, R167, R168, R169, R170, R171, R172, R173, R174, R213, R214, R215	Resistor SM 0805 Film 220Ω 1/10W 5%
10	4	121-6005-00	(101-0001849)	R198, R200, R203, R205	Resistor SM 0805 Film 22KΩ 1/10W 5%
11	5	121-6023-00	(101-0001889)	R45, R86, R88, R121, R122	Resistor SM 0805 3.3KΩ 1/10W 5%
12	3	121-6024-00	(101-0002009)	R69, R129, R130	Resistor SM 0805 33Ω 1/10W 5%
13	2	121-6006-00	(101-0002012)	R54, R93	Resistor SM 0805 Film 330Ω 1/10W 5%
14	24	121-6013-00	(101-0002035)	R35, R36, R39, R40, R41, R42, R43, R44, R46, R47, R48, R49, R50, R51, R52, R53, R183, R184, R185, R186, R187, R188, R190	Resistor SM 0805 Film 39KΩ 1/10W 5%
15	2	121-6008-00	(101-0002046)	R17, R19	Resistor SM 0805 Film 4.7KΩ 1/10W 5%
16	4	121-6014-00	(101-0002065)	R219, R220, R221, R222	Resistor SM 0805 Film 47Ω 1/10W 5%
17	3	121-6025-00	(101-0002067)	R199, R204, R216	Resistor SM 0805 470Ω 1/10W 5%
18	1	121-6015-00	(101-0002071)	R209	Resistor SM 0805 Film 47KΩ 1/10W 5%
19	99	125-6001-00	(121-0000056)	C25, C26, C27, C29, C31, C33, C37, C39, C40, C41, C42, C43, C44, C45, C46, C47, C48, C51, C52, C54, C62, C64, C65, C67, C68, C69, C71, C75, C77, C78, C79, C80, C81, C82, C83, C89, C90, C91, C92, C103, C104, C105, C121, C123, C168, C169, C171, C174, C175, C176, C177, C182, C184, C185, C186, C187, C188, C189, C190, C191, C192, C193, C202, C203, C204, C205, C206, C207, C208, C209, C210, C211, C212, C213, C214, C219, C220, C222, C223, C224, C227, C230, C231, C232, C235, C238, C239, C240, C241, C243, C244, C248, C250, C251, C252, C253, C254, C257, C258	Capacitor SM 0805 Cer. .1UF 50V 10% X7R
20	3	125-6013-00	(121-0000077)	C28, C57, C60	Capacitor SM 0805 Cer. 1UF 10V 10% X7R
21	1	125-6014-00	(121-0000086)	C97	Capacitor SM 0805 Cer. 3300PF 50V 5% X7R
22	7	125-6002-00	(121-0000096)	C259, C260, C261, C262, C263, C264, C265 Rev. G as Mods on back of PCB, Rev. H in place (FCC Caps Plasma Ribbon Cable)	Capacitor SM 0805 Cer. 470PF 50V 5% NPO
23	3	125-6015-00	(121-0000269)	C102, C228, C236	Capacitor SM Case D Tant 22UF 25V 20%
24	11	125-6003-00	(121-0005236)	C1, C2, C3, C4, C5, C6, C7, C8, C110, C161, C167	Capacitor SM 0805 Cer. .01UF 50V 10% X7R
25	49	125-6016-00	(121-0004245)	C9, C10, C11, C12, C13, C14, C15, C16, C17, C18, C19, C20, C21, C22, C23, C24, C49, C50, C53, C56, C61, C63, C70, C74, C106, C116, C117, C118, C119, C120, C122, C124, C125, C126, C127, C145, C146, C147, C148, C149, C194, C195, C196, C197, C198, C199, C200, C201	Capacitor SM 0805 Cer. 47PF 50V 5% NPO
26	4	125-6017-00	(121-0005317)	C95, C100, C107, C256	Capacitor SM Case A Tant 2.2UF 16V 10%
27	6	125-6004-00	(121-0005318)	C30, C34, C35, C36, C38, C66	Capacitor SM 0805 Cer. 22PF 100V 5% NPP
28	2	125-6005-00	(121-0006113)	C178, C221	Capacitor SM1206 Cer. 4.7PF 16V 20% Y5V
29	2	125-6006-00	(121-0007394)	C159, C163	Capacitor SM 603 Cer. 1500PF 25V 10% X7R
30	10	125-6007-00	(121-0007853)	C58, C59, C72, C76, C94, C165, C166, C170, C225, C233	Capacitor SM Case C Tant 10UF 16V 20%
31	1	125-6018-00	(121-0010097)	C98	Cap. SM 805 Cer. .033UF 50V +80/-20% Y5V
32	4	125-6009-00	(121-0010493)	C32, C73, C160, C162	Capacitor SM 805 Cer. 680PF 50V 5% NPO
33	6	125-6019-00	(134-0005415)	C172, C173, C226, C229, C234, C237	Capacitor Tht. Radial Alum. 100UF 35V 20%
34	3	125-6020-00	(134-0007336)	C93, C247, C249	Capacitor Tht. Radial Alum. 47UF 35V 20%
35	1	125-6010-00	(139-0006487)	C225	Capacitor Tht. .22UF 5.5V, Gold, SD, Vert
36	6	125-6011-00	(161-0004959)	L4, L5, L6, L7, L8, L9	Ind.-SM Ferrite 100Ω 1234 Smt.
37	2	125-6012-00	(161-0007286)	L1, L2	Ind.-SM Ferrite 805 Bead 600Ω 100Mhz 25% 500mA
38	1	125-6021-00	(161-0009686)	L3	Ind.-SM EP Inductor15uH 1100mA 20%

CPU/SOUND PCB S.A.M. SYSTEM COMPONENT PARTS CONTINUED

Item	Qty	SPI Part Number	(MFG. P.N.)	Ref-Designator	Description (SM = Surface Mount)
39	20	112-6000-00	(181-0004347)	D1, D2, D3, D4, D5, D7, D8, D9, D11, D12, D13, D14, D15, D16, D17, D18, D24, D25, D26, D28	Diode SM miniMELFDL/LL4148 100V 500mW
40	5	112-6001-00	(181-0004478)	D10, D19, D20, D21, D22	Diode SM MELF Dl4004 400V 1.0A
41	1	110-6000-00	(201-0006808)	Q10	Fet-SM SOT-23 MMBF170 N-Chnnl. Fet
42	9	110-0069-00	(213-0003546)	Q1, Q2, Q3, Q4, Q5, Q6, Q7, Q8, Q9	Transistor Tht. TO-92 2N3904 NPN 40V 0.2A
43	1	124-6000-00	(213-0005687)	U34	Tran. Tht. TO-220 LT1806 3.3V 1.5A Volt Reg.
44	8	100-6004-00	(221-0001000)	U2, U4, U5, U14, U25, U26, U36, U41	I.C.-SM SO 74LVC245 Oct. Bus Xcvr,
45	1	100-5048-00	(221-0003716)	U55	I.C.-SM SOIC 74HCT245DW Octal Line Xvr. W/3S
46	4	100-6005-00	(221-0003718)	U15, U22, U35, U40	I.C.-SM SO LM339 Quad Diff. Comparator
47	1	100-6006-00	(221-0005249)	U43	I.C.-SM SOIC DS1302 Time Keeper
48	1	100-6008-00	(221-0006578)	U52	I.C.-SM SOIC SP232A SO-16
49	1	100-6009-00	(221-0006914)	U32	I.C.-SM SOT-223 DS1233A2-15 Reset
50	1	100-6007-00	(221-0006919)	U30	I.C.-SM OPA2353 Dual CMOS O/A MSOP-8
51	1	100-6018-00	(221-0006940)	U48	I.C.-SM SOJ IDT71V016SA15Y SOJ-44
52A	1	100-6016-00	(221-0007056)	U7 (must be programmed) XC95144XL program for U7 (I.C.-SM TQFP CPLD 144 Macro Cell 3.3V)	
52B	1	100-6017-00	(221-0007056)	U42 (must be programmed) XC95144XL program for U42 (I.C.-SM TQFP CPLD 144 Mac. Cell 3.3V)	
53	1	124-6001-00	(221-0007298)	U3	I.C.-SM SOIC LT1503CS8-1.8
54	1	100-6012-00	(221-0010735)	U11	I.C.-SM SOIC CY62128 SRAM 128Kx8 3V LP SO32
55	1	100-6013-00	(221-0010736)	U49	I.C.-SM QFP-L AT43 USB380 Processor USB 2.0
56	1	100-6014-00	(221-0010738)	U16	I.C.-SM SSOP PCM1755 24-Bit Audio DAC 16-Pl
57	1	100-6010-00	(221-0010978)	U13	I.C.-SM SOJ IDT71V416S15Y SOJ-44
58	1	100-6011-00	(221-0010981)	U44	I.C.-SM TSOP S29GL256N11 256MB Flash
59	1	100-6015-00	(221-0011102)	U1	I.C.-SM SOIC 74LV273 SOIC-20
60	1	124-6002-00	(225-0003581)	U54	I.C.-Tht TO-220 LM317T Adjustable Volt Reg.
61	2	100-5016-20	(225-0003635)	U50, U51	I.C.-Tht Pantawat TDA2030 18W Amplifier
62	1	124-6003-00	(225-0006921)	U33	I.C-Tht TO-220 LM340T 5V 1A Volt Regulator
63	1	077-5217-00	(301-0004285)	SU9	Socket DIP/SIP 32-Pin, Tin, .6, DIP
64	2	n/a	(303-0005944)	TP1, TP2	Test Pt. All Test Point, White, Miniature
65	1	045-	(315-0003511)	JP1	Con.-Tht. Header 2 Pin, 1 Row, VT, Tin, .1"
66	1	045-	(315-0004096)	J11	Con.-Tht. Header 6 Pin, 1 Row, VT, Tin, .156"
67	1	045-	(315-0004121)	J11	Con.-Tht. Header 9 Pin, 1 Row, VT, Tin, .156"
68	4	045-	(315-0004122)	J3, J6, J12, J13	Con.-Tht. Hdr. 10 Pin, 1 Row, VT, Tin, .156"
69	1	045-	(315-0004124)	J8	Con.-Tht. Header 6 Pin, 1 Row, VT, Tin, .1"
70	1	045-	(315-0006776)	J14	Con.-Tht. Hdr. 6 Pos. Phone Jack, Vertical
71	1	045-	(315-0006910)	J9	Con.-Tht. Header 20 Pin, 2 Row, VT, Tin, .1"
72	1	045-	(315-0009252)	J10	Con.-Tht. Header 4 Pin, 1 Row, VT, Tin, .156"
73	1	045-	(315-0009520)	J2	Con.-Tht. Hdr. 12 Pin, 1 Row, VT, Tin, .156"
74	1	045-	(315-0009626)	J15	Con.Tht. 4 Pos. USB Recpt, VT, WHT/BLK
75	1	045-	(315-0009627)	J4	Con.-Tht. D-Sub 9 Pos, VT, w/lock & Hex Sc.
76	1	045-	(315-0010979)	J5	Con.-Tht. Hdr. 14 Pin, 2 Row, VT, Gold, .1" Shrou.
77	1	140-6000-00	(401-0007295)	Y2	XTAL.-SM 32.768MHz Cl 12.5 FSR327
78	1	140-6001-00	(401-0010737)	Y3	XTAL.-SM 600MHz 20PF
79	1	140-6002-00	(403-0005489)	Y1	Osc.-SM SO 400MHz 5V Tristate CMOS
80	1	515-	(421-0010979)	B1	Battery (Coin Cell 24.5mm) Holder with clip
81	1	000-0644-01	(421-0010980)	for B1	Coin Cell 3V 265maH 24X3 mm (CR2430)
82	1	165-6003-00	(425-0005320)	LED1	LED SM Green 0805 LED
83	1	165-6004-00	(425-0010803)	LED3	LED SM Dual Red/Green 1210 Top
84	1	182-5002-00	(450-0004750)	SW1	8-Position DIP Switch Spst. 16 Pin X8 Slide 5VDC 100ma
85	1	182-5001-00	(450-0004752)	S1	White Push-Button Reset Switch Spst. 4 Pin Momentary 24VDC 50ma
86	2	127-5001-00	(461-0003520)	for U33, U34	Heatsink All Vert Mount Ba TO-220
87	2	127-5001-01	(461-0003528)	for U50, U51	Heatsink All Vert Mount Ba TO-220
88	4	237-5909-01	(504-0004604)	for Heatsinks U33, U34, U50, U51	#4-40 X 3/8" PPH MS Sems (Zinc) Screw
89	4	240-5318-00	(503-0004457)	for Heatsinks U33, U34, U50, U51	#4-40 Keps Nut
90	4	254-5007-05	(507-0004547)	for Mntg. Holes (Mfg. .169" I.D. X 9/32" O.D. X 5/16")	5/16" Slf. Rtn. Spacer White

6. SPECIFICATIONS

500-55C0-01

SPECIFICATIONS, MECHANICAL, GAME SETUP

Specification	Imperial	Metric
Weight	210 lbs	96 kg
Max dimensions, leg levelers extended (h, w, d)	78 x 27.75 x 57 in	198 x 70.5 x 145 cm
Minimum game dimensions (h, w, d)	76 x 27.75 x 57 in	193 x 70.5 x 145 cm
Minimum room dimensions per game (h, w, d)	80 x 36 x 84 in	203 x 91 cm x 214 cm

- (h, w, d) = height, width, depth.

SPECIFICATIONS, MECHANICAL, BOXED

Specification	Imperial	Metric
Weight, boxed (without pallet)	230 lbs	105 kg
Box dimensions (h, w, d)	56.5 x 31 x 31 in	144 x 79 x 79 cm
Minimum dimensions (h, w, d)	76 x 26 x 57 in	193 x 66 x 145 cm

- (h, w, d) = height, width, depth.

SPECIFICATIONS, ELECTRICAL

Specification	North America - 120VAC	International - 240VAC
Line Voltage, Nominal	120 VAC	240 VAC
Line Voltage Range	90 VAC - 250 VAC	90 VAC - 250 VAC
Line Frequency *	60 Hz	50 Hz, 60 Hz
Line Power, Current - attract mode	70 W, 0.6 A @ 120 VAC	70 W, 0.3 A @ 240 VAC
Line Power, Current - nominal	360 W, 3 A @ 120 VAC	360 W, 1.5 A @ 240 VAC
Line Power, Current - peak, <100 ms	540 W, 4.5 A @ 120 VAC	540 W, 2.25 A @ 240 VAC

* NOTE: Games designed for 60hz operation (e.g. North America games) will not function correctly on 50hz power and vice versa.

WARNING: Overloading electrical supply circuits is dangerous. Do not overload circuits. To calculate the maximum number of games for a circuit, check circuit amperage rating and divide by the game Nominal Line Power Current rating for your line voltage. For example, a 15A 120V household circuit, 15/3 A (nominal current) = 5 games maximum.

SPECIFICATIONS, ENVIRONMENT

	Minimum	Maximum
Temperature, Operating	32 °F / 0 °C	104°F / 40 °C
Temperature, Storage	32 °F / 0 °C	104°F / 40 °C
Relative Humidity, Operating	5%	95% non-condensing
Relative Humidity, Storage	5%	95% non-condensing

- (a) "The appliance has to be placed in a horizontal position."
- (b) "This appliance is not to be cleaned by a Water Jet."
- (i) "Do not locate this appliance in an area where a Water Jet is used."
- (ii) "Do not clean this appliance with a Water Jet."
- (c) If the supply cord is damaged, it must be replaced with the same cord available from the manufacturer or its service agent.

6.1 GAME DIMENSIONS

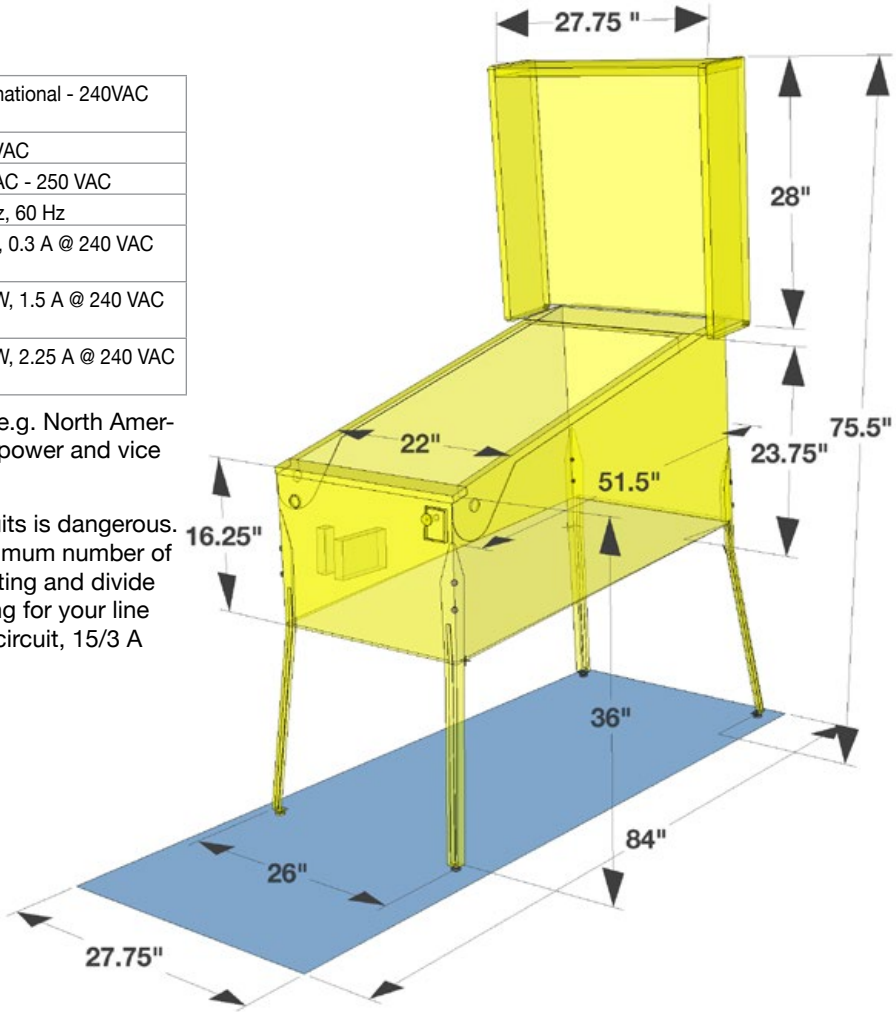

6.2 WARRANTY

500-55C0-01

Stern Pinball machines are assembled in Elk Grove Village, Illinois, USA; each pinball machine has unique characteristics that make it a one-of-a-kind American-made product. Each machine will have variations in appearance resulting from differences in the machine's particular wood parts, individual silk screened art and mechanical assemblies. Stern Pinball has inspected each game element to insure it meets stringent quality and playability standards.

STERN PINBALL INC LIMITED WARRANTY

Stern Pinball Inc ('SELLER') warrants only to the initial purchaser of its products that the items listed below are free from defects in material and workmanship under normal use and service for the warranty period specified:

- Printed circuit boards (game logic): 2 months
- Dot Matrix Display boards: 9 months

No other parts of seller's product are warranted.

Warranty periods are effective from the initial date of shipment from seller to its authorized distributors.

Seller's sole liability shall be, at its option, to repair or replace products which are returned to seller during the warranty periods specified, provided:

1. Seller is notified promptly upon discovery by purchaser that stated products are defective.
2. Such products are properly packaged and then returned freight prepaid, to seller's plant.

This warranty does not apply to any parts damaged during shipment and/or due to improper handling, or due to improper installation or usage, or alteration. In no event shall the seller be liable for any anticipated profits, loss of profits, loss of use, accidental or consequential damages, or any other losses incurred by the customer in connection with the purchase of a Stern Pinball Inc Product.

WARRANTY DISCLAIMER

Except as specifically provided in a written contract between seller and purchaser, there are no other warranties, express or implied, including any implied warranties of merchantability or fitness for a particular purpose.

PARTS SUBSTITUTIONS

For safety and reliability, substitute parts and equipment modifications are not recommended and may void any and all warranties. Use of Non-Stern Pinball Inc Parts or Modifications of game circuitry may adversely affect game play or game safety. Transport pinball machines with hinged backbox in the down position only! Always take great care when servicing any game. Always ready the service manual before replacing or servicing components. Substitutions of parts or equipment modifications may void FCC type acceptance.

Always disconnect the line voltage before servicing. Some parts may remain energized when unplugged. Take great caution when serving any electrical components.

FCC CLASS A SUBPART J COMPLIANCE

This equipment has been tested and found to comply with the limits for a Class A digital device, pursuant to part 15 of the FCC Rules. These limits are designed to provide reasonable protection against harmful interference when the equipment is operated in a commercial environment. This equipment generates, uses, and can radiate radio frequency energy and, if not installed and used in accordance with the instruction manual, may cause harmful interference to radio communications. Operation of this equipment in a residential area is likely to cause harmful interference in which case the user will be required to correct the interference at his own expense.

RF INTERFERENCE NOTICE

The cable harness placements, ground strap routing, and other shielding have been designed to keep RF radiation and conduction within levels accepted by FCC rules. To maintain these levels, factory harness position, shielding, and ground straps must be installed in their factory locations should they become disconnected during maintenance.

COPYRIGHT AND INTELLECTUAL PROPERTY NOTICE

This document and the data disclosed herein or herewith is not to be reproduced (Except where noted), used, or otherwise disclosed in whole or in part to anyone without written consent of Stern Pinball Inc.

Products in this manual, the company name and devices and the design of the manual itself are protected by federal patents (and patents pending), design registrations, trademarks, and copyrights. Action will be taken in the event of infringement or imitation. The right is reserved to change specifications without prior notice.

6.3 WARNINGS, COMPLIANCE, AND LEGAL NOTICES

500-55C0-01

PHOTOSENSITIVE SEIZURES HEALTH WARNING

A very small percentage of people may experience a seizure when exposed to certain visual images, including flashing lights or patterns. Even people with no history of seizures of epilepsy may have an undiagnosed condition that can cause "photosensitive epileptic seizures" due to certain visual images, flashing lights or patterns. Symptoms can include light-headedness, altered vision, eye or face twitching, jerking or shaking of arms or legs, disorientation, confusion, momentary loss of awareness, and loss of consciousness or convulsions that can lead to injury from falling down or striking nearby objects.

IMMEDIATELY STOP PLAYING AND CONSULT A DOCTOR IF YOU EXPERIENCE ANY OF THESE SYMPTOMS.

1-800-KICKERS
PARTS.SERVICE@STERNPINBALL.COM
WWW.STERNPINBALL.COM
FACEBOOK.COM/STERNPINBALL

AC/DC PRO #500-55C0-01
MANUAL #780-50M5-00